2042

935

TACOM

R and D

TECHNICAL REPORT

NO. 12924

DESIGN & DEVELOPMENT OF A DEPOT LEVEL GAUGING SYSTEM FOR THE 6V53 ENGINE

PHASE I

APRIL 1984

Final Report

CONTRACT NO. DAAE07-83-C-RO14

by M. J. CAINES

Chamberlain National

GARD Division

7501 North Natchez Avenue

Niles, Illinois 60648

Reproduced From

Best Available Copy

DISTRIBUTION STATEMENT A

Approved for Public Release

Distribution Unlimited

U.S. ARMY TANK-AUTOMOTIVE COMMAND

Warren, Michigan 48090

20010831 103

TACOM

R and D

TECHNICAL REPORT

NO. 12924

DESIGN & DEVELOPMENT OF A DEPOT LEVEL GAUGING SYSTEM FOR THE 6V53 ENGINE

PHASE I

APRIL 1984

Final Report

CONTRACT NO. DAAE07-83-C-RO14

by M. J. CAINES
Chamberlain National
GARD Division
7501 North Natchez Avenue
Niles, Illinois 60648

U.S. ARMY TANK-AUTOMOTIVE COMMAND
Warren, Michigan 48090

NOTICES

This report is not to be construed as an official Department of the Army position.

Mention of any trade names or manufacturers in this report shall not be construed as an official endorsement or approval of such products or companies by the U.S. Government.

Destroy this report when it is no longer needed. Do not return it to the originator.

Unclassified

SECURITY CLASSIFICATION OF THIS PAGE (When Data Entered)

REPORT DOCUMENTATION PAGE		READ INSTRUCTIONS BEFORE COMPLETING FORM
1. REPORT NUMBER 12924	2. GOVT ACCESSION NO.	3. RECIPIENT'S CATALOG NUMBER
4. TITLE (and Subtitle) Design and Development of a Depot Level Gauging System for the 6V53 Engine Phase I		5. TYPE OF REPORT & PERIOD COVERED Final Report March 1983 - April 1984 6. PERFORMING ORG. REPORT NUMBER A1-69
7. AUTHOR(s) M. J. Caines		8. CONTRACT OR GRANT NUMBER(s) DAAE07-83-C-R014
9. PERFORMING ORGANIZATION NAME AND ADDRESS Chamberlain National GARD Division Niles, IL 60648		10. PROGRAM ELEMENT, PROJECT, TASK AREA & WORK UNIT NUMBERS
11. CONTROLLING OFFICE NAME AND ADDRESS U.S. Army Tank-Automotive Command Warren, Michigan Attn: D. Adkins/DRSTA-QAT		12. REPORT DATE April 1984 13. NUMBER OF PAGES
14. MONITORING AGENCY NAME & ADDRESS(if different from Controlling Office)		15. SECURITY CLASS. (of this report) Unclassified 15a. DECLASSIFICATION/DOWNGRADING SCHEDULE

16. DISTRIBUTION STATEMENT (of this Report)

For public dissemination, distribution unlimited.

17. DISTRIBUTION STATEMENT (of the abstract entered in Block 20, if different from Report)

18. SUPPLEMENTARY NOTES

19. KEY WORDS (Continue on reverse side if necessary and identify by block number)

Gauging	Metrology
Robot	Inspection
Engine	Quality Control
Automatic	Gaging

20. ABSTRACT (Continue on reverse side if necessary and identify by block number)

This program is directed toward the design and development of a prototype Depot-level automatic dimensional gauging system to perform representative dimensional measurements for the 6V53 engine. This report describes efforts expended during Phase I of this project: Engineering Analysis and System Design.

Engineering analysis began by reviewing the Depot measurement requirements and inspection procedures for the 6V53 engine and components. These

DD FORM 1 JAN 73 1473 EDITION OF 1 NOV 65 IS OBSOLETE

Unclassified

SECURITY CLASSIFICATION OF THIS PAGE (When Data Entered)

20. ABSTRACT (Cont'd)

produced a data base used for determining relative implementational priority for each type of measurement. A review of commercially available gauging approaches and techniques was performed in order to determine the suitability of each technique for use at the Depot-level for the 6V53 engine.

The prioritized data was grouped by common gauging technique applicability. From these groupings it became apparent that the most suitable technique from which to base the automatic gauging system was a combination of non-contact electronic sensors with robotic manipulation. Evaluation of currently available applicable hardware and software was made by vendor visits, evaluation of key items, and in-house testing. Using these as a base, the final system was defined. Its design is presented in this report.

Phase II of this project will involve detailed design, fabrication, installation of the prototype System at Red River Army Depot. Documentation and training will also be provided.

SUMMARY

This Phase (Phase I) of Contract No. DAAE07-83-C-R014 was divided into four main objectives:

1. Analysis of data pertinent to the required dimensional measurements of the 6V53 engine and associated components.
2. Preliminary design of a mobile automatic gauging (MAG) system to perform applicable measurements.
3. Evaluation of key elements of the MAG system.
4. Final design of the prototype MAG system.

Data analysis consisted of determining each measurement's individual priority and then grouping them based upon commonality. The most advantageous gauging approach to the MAG system was then selected based upon the highest number of highest priority measurements which could be performed (and other criteria). It uses non-contact electronic sensors to make the measurements.

A preliminary design of the MAG system was performed which included the non-contact electronic sensors for measuring a dimension, a robot system to move the sensors to the item to be measured and then to a reference standard, and the reference standard to transfer the dimensions to the main system computer. Key elements of the MAG system (computer, robot, sensors, reference standard) were evaluated through a combination of literature search, vendor visits, and in-house tests. A final design of the prototype MAG system, based upon the evaluation results, was developed and is presented at the end of this report.

PREFACE

The author gratefully acknowledges the assistance provided by Messrs. D. Adkins and R. W. Watts of TACOM, Messrs. J. Kirkland and P. Crews of Red River Army Depot, Messrs. W. L. Lichodziejewski, Manager, and B. J. Koehler of GARD's Electronic Systems Department, and Messrs. P. Sopt and R. Schoon of GARD's Mechanical Engineering Department.

TABLE OF CONTENTS

Section		Page
1.0	INTRODUCTION	11
2.0	OBJECTIVE	13
3.0	CONCLUSION	14
4.0	RECOMMENDATION	15
5.0	DATA ANALYSIS	16
5.1	Data Collection Methodology	16
5.2	Implementation Prioritization	22
5.3	Commonality Analysis	25
5.3.1	Preliminary Conceptual Gauging Systems	30
5.3.2	Commonality Assignment	36
5.3.3	Ranking Analysis	37
6.0	PRELIMINARY SYSTEM DESIGN DEFINITION	65
7.0	KEY ELEMENTS	77
7.1	Electronic Gauge	77
7.2	Reference Standard	82
7.3	Robot	84
7.4	Main Computer	86
7.5	Evaluation	89
8.0	FINAL SYSTEM DESIGN DEFINITION	103
8.1	Subsystem Description	107
8.1.1	Gauging Subsystem	107
8.1.2	Reference Standard Subsystem	114
8.1.3	Robot Subsystem	117
8.1.4	Main Computer Subsystem	120
8.2	System Operation	121
8.2.1	Operator Level	122
8.2.2	Engineering Level	126
8.3	System Capabilities	130
8.4	Discussion	135
	APPENDIX A - IMPLEMENTATION PRIORITIZATION DATA (IPD) AS SUPPLIED BY RED RIVER ARMY DEPOT	A-1
	APPENDIX B - PRELIMINARY ELECTRONIC SENSOR SUBSYSTEM SPECIFICATION	B-1

THIS PAGE LEFT BLANK INTENTIONALLY

LIST OF ILLUSTRATIONS

Figure		Page
5.1	Implementation Prioritization Data (Sample)	18
5.2	Gauging Technique Ranking By Matrix Analysis	61
6.1	Conceptual Mobile Automatic Gauging System	66
6.2	Automatic Gauging System Block Diagram	67
6.3	Conceptual Electronic Gauging Device	69
7.1	Cross Sectional View of a Typical HiTEC Non-Contact Sensor	79
7.2	The "Maker 100" Robot from United States Robots	87
7.3	Overall View of the Set-Up Used for the Repeatability Test	90
7.4	Detailed View of the Probes, Holding Fixture and Calibration Block	91
7.5	Set-Up Used for Accuracy Test	93
7.6	Theoretical Response of the Gauging Probe as a Function of Distance from the Reference Surface	94
7.7	Raw Data Collected from Accuracy Test	95
7.8	Change in Length of Reference Standard Vs. Change in Output from Gauging Sensor (0.005 in. Offset)	97
7.9	Change in Length of Reference Standard Vs. Change in Output from Gauging Sensor (0.025 in. Offset)	98
7.10	Change in Length of Reference Standard Vs. Change in Output from Gauging Sensor (0.050 in. Offset)	99
7.11	Results of the Long Term Stability Test Showing Date, Time and Dimension	102
8.1	Side View of Prototype MAG System	104
8.2	End View of Prototype MAG System	105
8.3	MAG System Block Diagram	106
8.4	Example of Gauging Probe Placement at Various Places on the 6V53 Engine	108
8.5	Electronic Gauging Subsystem	109
8.6	Functional Block Diagram of One Pair of Probes and Required Electronics	111
8.7	Example of Data Presentation	124
8.8	OPERATE Mode Flowchart	125
8.9	ENGINEERING Mode Flowchart	128

THIS PAGE LEFT BLANK INTENTIONALLY

LIST OF TABLES

Table		Page
5.1	Normalized and Weighted Implementation Prioritization Table	26
5.2	Video	39
5.3	Video-Stage	41
5.4	Electronic	43
5.5	Laser	45
5.6	Surface	47
5.7	Other	48
5.8	Normalized and Weighted Implementation Prioritization Table	49
5.9	Normalized and Weighted Implementation Prioritization Table	50
5.10	Commonality Analysis	51
5.11	Commonality Analysis	53
5.12	Commonality Analysis	55
5.13	Commonality Analysis	57
5.14	Commonality Analysis	59
8.1	Applicable Measurements	131

THIS PAGE LEFT BLANK INTENTIONALLY

1.0 INTRODUCTION

The program described in this report was performed by GARD Division of Chamberlain National, 7501 N. Natchez Avenue, Niles, Illinois 60648, for the U. S. Army Tank-Automotive Command, under Contract No. DAAE07-83-C-R014, and is directed toward the design and development of a prototype Depot-level automatic dimensional gauging system to perform representative dimensional measurements for the 6V53 engine. This report describes efforts expended during Phase I of this project: Engineering Analysis and System Design.

The work was administrated under the direction of Army Project Engineer D. Adkins of TACOM-QAT, Warren, Michigan. The contractor's Project Engineer was M. J. Caines of GARD's Electronic Systems Department.

This report covers work conducted during the period of March 1983 to May 1984. It was originally submitted by the author in March, 1984.

This project has been accomplished as part of the U. S. Army Materials Testing Technology Program, which has for its objective the timely establishment of testing techniques, procedures or prototype equipment (in mechanical, chemical, or nondestructive testing) to insure efficient inspection methods for materiel/material procured or maintained by DARCOM.

U. S. Army Depots need a system which can automatically and accurately perform dimensional gauging of the 6V53 engine and its components.

The current dimensional gauging techniques used at RRAD are based upon the use of mechanical measuring devices such as micrometers, dial bore gauges, and feeler gauges. Though these devices perform the necessary measurements, they are subject to the inherent drawbacks of operator interpretation, need for frequent recalibration, mechanical wear, and the time needed to read and then transcribe the measurement manually. Potential gauging solutions to upgrading the current measurement techniques include a variety of approaches more suited to automation: video, laser, electronic, and video with a moving stage.

GARD has been awarded a contract to develop such a system. The contract is divided into two Phases. The first Phase is analysis of the required measurements, evaluation of currently available gauging techniques, and a recommended system design for a prototype automatic gauging system. The second Phase of this project is design and construction of the prototype, installation of the prototype at Red River Army Depot (RRAD), training and support.

This report presents Phase I results: background data analysis, gauging technique selection, the original conceptual design, the evaluation of the key components, and the evolved design of the prototype automatic Depot-level gauging system for the 6V53 engine.

2.0 OBJECTIVE

The objective of this program is to design and develop a prototype Depot-level automatic gauging system for use with 6V53 engine components.

The scope of this phase of the program (Phase I of two Phases) included the analysis of component measurement requirements, commercially available capabilities, relevant gauging hardware, establishment of required operating characteristics, definition of practical system parameters, laboratory design/testing of critical elements of the design approach, and a final system design which identifies the modular subsystem functional parameters.

3.0 CONCLUSION

Results of prioritization and gauging technique analysis have determined that a robotically manipulated, non-contact electronic sensing system is the best solution to the Red River Army Depot needs for an automatic gauging system. Literature search, vendor visits, key element evaluation and testing have allowed the formulation of an applicable gauging system design.

4.0 RECOMMENDATION

Based upon the results of this Phase of the Project, GARD recommends that Phase II (System Fabrication and Installation) should now be initiated to allow implementation of this prototype Mobile Automatic Gauging System for Red River Army Depot benefit.

5.0 DATA ANALYSIS

To provide relevant data with which to make decisions as to what type of gauging system would be most effective for 6V53 engine gauging requirements, several categories of data were analyzed: component measurement requirements, relevant commercially available gauging approaches and systems, commonality of implementation, and parametric ranking analysis. These were all used to choose the optimum gauging approach within the performance requirements of the final system.

This section explains the methodology and results of these analyses.

5.1 Data Collection Methodology

Descriptions of the components and the tolerances to be considered during design of automatic gauging system were supplied by TACOM and are part of DMWR9-2815-205, "Overhaul Inspection Procedure", which contains information about component dimensional tolerances, reclamation instructions and assembly procedures for select 6V53 engine components. TACOM divided the parts under consideration into assemblies (known as Appendix A). These are:

- Block Assembly, Engine
- Crankshaft Assembly, Engine
- Rod Assembly, Connecting Piston
- Piston Assembly, Engine
- Sleeve, Cylinder Liner
- Camshaft Assembly, Left and Right
- Cylinder Head Assembly, Engine Block

And miscellaneous small engine parts (known as Appendix B).

To collect additional, and organize available information regarding the 6V53 engine and components, an "Implementation Prioritization Data" form was designed. An example of this form is shown in Figure 5.1. This form was used by personnel at Red River Army Depot to collect the necessary additional information. Information regarding the meaning of the various data collected follows:

Complexity/Skill Level This is a two-part entry. The first part is a subjective opinion by a person familiar with a majority of the different measurements on the 6V53 engine, and is an opinion regarding the difficulty of performing the measurement correctly (1 = none, 2 = low, 3 = medium, 4 = high, 5 = very high). The second part is an estimate of the skill level required of the person making the measurement (1 = Mechanics Helper, 2 = Sub-Journeyman, 3 = Journeyman).

EXAMPLE: A visual inspection of a washer for large scratches could be entered as

2/1

Error Probability This information should be obtained from Quality Assurance records and shows the number of measurements of a characteristic found to be out of tolerance out of the number of checks made.

EXAMPLE: Quality Assurance records show that 20 checks were made on the diameter of a bore and 3 were found to be out of tolerance. The entry would be

3/20

NOTE: If records are not available, a probability estimate should be made by Quality Assurance personnel using the same format.

ITEM: Crankshaft Assembly: Engine

PART NO.: 5198562 (72582)

DATE: March 30, 1983 BY: J. Smith FROM: RRAD

REF: DMWR 9-2815-205

APPENDIX: A

REF	CHARACTERISTIC	DEFECT	METHOD OF INSPECTION	INSPECTION REQUISITE		MEASUREMENT INFORMATION: COMPLEXITY/ SKILL LEVEL (1-5)/(1-3)	ERROR PROBABILITY (# Out of Tol./ # Checked)	TESTS PERFORMED	PERFORMANCE TIME (For Test Group)	GROUPS PER SET-UP	FABRICATION CRITICALITY (1-3)	PERFORMANCE CRITICALITY (1-3)	ITEM INFORMATION
A	Diameter	Major	Dial Snap Gage	3.5000	3.4990	2/2	16/3000	4	20MIN	6	1	3	INSPECTION VOLUME (# Items/ Time)
B	Diameter	Major	Dial Snap Gage	2.7500	2.7490	2/3	2/50	3	10MIN.	2	2	2	
C	Roundness	Major	Dial Snap Gage		0.00025 Max	5/3	2/25	7	5MIN	1	1	2	16/WEEK
D	Taper	Major	Dial Snap Gage		0.0030 Max	4/2	1/10	7	1 HR.	16	2	2	FABRICATION CRITICALITY (Rejects/ Time)
E	Runout of Intermediate main bearing journals to front and rear journals	Major	VEE Blocks, Surface Plate, Indicator and Stand		0.0030 Tir	5/3	1/25	2	1 HR.	6	3	1	1 /YEAR
F	Surface Finish	Major	Visual and Dial Indicator		No ridges exceeding 0.0002	1/1	10/17	7	30MIN	6	2	1	PERFORMANCE CRITICALITY (Rejects/ Time)
G	Diameter	Major	Dial Snap Gage	4.0610	4.0600	2/3	6/39	1	1HR	10	3	3	16/YEAR
H	Surface condition (thrust surface)	Major	Visual		No surface scoring or excessive wear	1/1	10/2000	8	10SEC	1	3	2	SET-UP TIME (Ref/Time)
J	Surface condition(front and rear oil seal surfaces)	Minor	Visual		No surface imperfec-tions (ridging or grooving)	3/3	1/3	2	2MIN	7	1	2	A-D, G /30MIN. E /2HR F /10MIN H-J /5MIN
	NOTE: If crankshaft is reground, the above inspection requisites marked with an * are invalid and the inspection requisites below apply.												
*A	Diameter	Major	Dial Snap Gage	3.490 0.010	3.489 undersize	2/1	1/50	4	30MIN	4	3	3	*A /NONE
				3.480 0.020	3.479 undersize								
				3.470 0.030	3.469 undersize								

Contract No. DAAE07-83-C-R014

Figure 5.1 Implementation Prioritization Data (Sample)

Tests Performed. This information is extracted from the DMWR column entitled "Number of Places" and reflects the number of times the same characteristic with the same reference is measured for each item.

Performance Time. The time to complete the measurements for a measurement group (the group is the number of places (Tests Performed) the particular characteristic is measured per item). The information should be obtained first from time standards. If they are not available, then obtain the information from inspector's estimate.

EXAMPLE: On the engine block the diameter of the top of the bore is measured in six places (as shown in the Tests Performed column) and each measurement takes 1 minute, the number entered on the data sheet is (6 tests) x (1 minute each) = 6 min.

NOTE: The set-up time (if any) is not included in this entry because set-up time is more likely to be the set-up time for a group of measurements rather than for a single measurement.

Groups Per Set-Up. The number of groups (of same reference and characteristic) inspected between set-up and breakdown of the inspection equipment used to measure the particular characteristic. If set-up and breakdown of inspection equipment is not applicable (for example, using a plug gauge) then use the number of pieces inspected at one time.

EXAMPLE: If a fixture is set-up, then 26 group measurements are made before the fixture is disassembled, then enter

26

If an inspector is given a box of 100 washers to gauge using a plug gauge then enter

100

Fabrication Criticality. This requires one entry for each characteristic measured on the item, and is a subjective estimate (1 = low, 2 = medium, 3 = high), of that particular characteristic's contribution to the item's criticality.

EXAMPLE: At the fabrication stage of the 6V53 engine, 2 cylinder head assemblies are rejected per week due to a particular characteristic of an item being out of tolerance. A subjective opinion of the characteristic's contribution is entered, such as

3

Performance Criticality. The individual characteristic's criticality entry is a subjective estimate of the characteristic's contribution to the performance failure of the item (1 = low, 2 = medium, 3 = high).

EXAMPLE: During performance testing, 3 cylinder head assemblies fail per month due to a diameter being out of tolerance. Then for the characteristic, enter a subjective opinion of the characteristic's contribution to the failure such as

2

Inspection Volume. This is the production quantity for each item inspected per unit of time. There is only one entry for each item.

EXAMPLE: An average of 500 pistons are measured in 6 months, the entry in the proper space in the Item Information column would be

500/6 months

Fabrication Criticality. This is the number of items which were rejected during fabrication per period of time.

EXAMPLE: At an engine fabrication station, an average of 25 engines were rejected because of an out of tolerance block in 1 month. The fabrication criticality entry would be

25/month

Performance Criticality. This is the number of engines rejected per period of time due to an item failure (out of tolerance condition) as the engine is being performance tested.

EXAMPLE: At the performance testing station, an average of 5 engines fail per month due to a defective (out of tolerance) cylinder head, the entry would be

5/month

NOTE: All of the above entries reflect an AVERAGE value for an AVERAGE period of time.

Set-Up Time. This shows much time is used to set-up (get ready) to take a particular measurement or group of measurement. The set-up time could be due to calibrating instruments, and positioning fixtures. There can be several different set-ups for each Item.

EXAMPLE: A set-up is made to measure characteristic D through L (REF column) and the set-up time is 1 hour, then the following entry is made

D-L/1 hour

A copy of the data received by GARD from RRAD is included in this report as Appendix A.

5.2 Implementation Prioritization

Once the information about the 6V53 engine and components was collected, it was necessary to reduce this data into a prioritized listing of all the required measurements.

The raw data was entered into a computerized data base management program. This computer program organized the data, and also performed necessary calculations to produce the prioritized listing of component measurements. Six categories were set up, and a numerical priority value was assigned to each. The six categories were: complexity/skill, error probability, performance time, test volume, fabrication criticality, and performance criticality. The individual derived priority values from these six categories were then added together to produce a derived priority number for each item.

The explanation of how the numerical values were derived follows:

<u>Complexity/Skill</u>

The Complexity value from the Implementation Prioritization Data (IPD) forms (from RRAD) is added to the Skill Level Value. In order to give equal weight to both the Complexity and Skill values, the Skill values (1,2,3) are translated to (1,3,5) to match the Complexity value range (1,2,3,4 and 5).

The resultant value from the addition of the Complexity and Skill values is then divided by 10 (the maximum sum) to normalize. finally the answer is multiplied by the weighting factor (.09).

The formula used is:

$$\frac{(\text{Complexity})+(\text{Skill})}{10} \times \text{(Weighting Factor)}$$

Error Probability

This is the number of out-of-tolerance measurements divided by the number of measurements checked. The ratio is then multiplied by the weighting factor (.15) and divided by the maximum error rate value for normalization.

The formula is:

$$\frac{(\text{\# of measurements out of tolerance})\text{x}(\text{Weighting Factor})}{(\text{\# of measurements checked})\ (\text{maximum value})^{*}}$$

Performance Time

First the set-up time (from IPD form) is distributed among the total number of tests performed. Next the performance time per group is distributed among the number of tests. The sum of the two answers is added, normalized by dividing by the maximum value found among all characteristics (tests) from all items in Appendix A, and multiplied by the weighting factor (.14).

The formula is:

$$\frac{\dfrac{(\text{Setup Time})}{(\text{\# of tests})\text{x}(\text{\#of groups})} + \dfrac{(\text{Performance time per Group})}{(\text{\# tests})}\ \text{x}(\text{Weighting Factor})}{(\text{Maximum value})^{**}}$$

Test Volume

The Item Inspection Volume (from IPD form) is multiplied by the number of tests performed. Then, to normalize, it is divided by the maximum value found from all characteristics (tests) from all items in Appendix A. Finally the answer is multiplied by the weighting factor (.14).

The formula is:

$$\frac{(\text{Item Inspection Volume})\text{x}(\text{\# Tests Performed})\text{x}(\text{Weighting Factor})}{\text{Maximum}\ [(\text{Item Inspection Volume})\text{x}(\text{\# Tests Performed})]^{***}}$$

Fabrication Criticality

Since the values are (1,2,3), the value on the IPD form is divided by 3 to normalize. The answer is then multiplied by the weighting factor (.15).

The formula is:

$$\frac{\text{(Fabrication Criticality)x(Weighting Factor)}}{3}$$

Performance Criticality

Since the values are (1,2,3), the value on the IPD form is divided by 3 to normalize. The answer is then multiplied by the weighting factor (.33).

The formula is:

$$\frac{\text{(Performance Criticality)x(Weighting Factor)}}{3}$$

Derived Priority

The Derived Priority is found by summing all of the previous normalized and weighted factors, then multiplied by 100 to put it in a format compatible with the computer program.

The formula is:

Derived Priority - (Complexity/Skill)+(Error Probability)+
(Performance Time)+(Test Volume)+
(Fabrication Criticality)+(Performance Criticality)

The highest priority test is that with the highest numerical value.

NORMALIZING FACTORS

* 1/22 (maximum error rate from IPD form)

** 175 (maximum inspection time from IPD form)

*** 3960 (maximum number of individual tests performed per month from IPD form)

Weighting Factors

The weighting factors used (for each category) were those originally agreed upon by RRAD, TACOM, and GARD at the project kickoff meeting. Later discussions between RRAD, TACOM, and GARD confirmed that the original weighting factors would be retained.

The listing of all of the derived priority values for all of the applicable items (155) are shown in Table 5.1. All of the derived priority values were summed to provide a total derived priority value (8,064). The individual derived priority value was later used to produce a percentage of total priority value for each candidate gauging technique.

5.3 Commonality Analysis

Before determining which of the candidate gauging techniques could be used to perform the largest number of highest priority required measurements, a set of conceptual gauging systems had to be created. These gauging system concepts were based upon devices and techniques which were commercially available. Once these conceptual gauging systems were defined it could then be determined which system or systems could be used to perform a specific measurement.

First, a description of the various conceptual gauging approaches is presented, then a measurement commonality analysis for the gauging approaches, then a gauging approach critical factors comparison and ranking analysis, and finally, a discussion of the results and a configuration recommendation.

Table 5.1

Normalized & Weighted Implementation Prioritization Table

05/05/83
Sorted by: 30.30

GARD, Inc.
Page No. 1

Apdx.	REF	Item	Characteristic	Method of Inspection	Cplx/ Skill	Error Prob.	Perf. Time	Test Volume	Fab. Crit.	Perf. Crit.	DERIVED PRIORITY(X100)
B	B	WasherThrust,Idler	Surface Condition	Visual	.027	.0	.0016	.0044	.05	.22	30.30
B	B	Washer,Thrust	Surface Condition	Visual	.036	.0	.002	.0076	.05	.22	31.56
B	B	Washer,StarterArm.	Surface Condition	Visual	.036	.0	.0016	.0035	.05	.22	31.11
B	B	Washer,StarterPin.	Surface Condition	Visual	.036	.0	.0008	.0084	.05	.22	31.53
B	B	LeverAssm,Starter	Surface Condition	Visual	.036	.0	.0016	.0035	.05	.22	31.11
B	C	LeverAssm,Starter	Item Condition	Visual	.036	.0	.0016	.0035	.05	.22	31.11
B	B	Shaft,ShiftLever	Surface Condition	Visual	.036	.0	.0016	.0035	.05	.22	31.11
B	C	Bushing,Bearing	Surface Condition	Visual	.036	.0	.0016	.0035	.05	.22	31.11
B	B	GearAssm,Idler	Surface Condition	Visual	.027	.0	.0016	.0044	.1	.22	35.30
B	D	GearAssm,Idler	Surface Condition	Visual	.027	.0	.0016	.0044	.1	.22	35.30
B	B	Armature,Starter	Diameter	Dial Snap Gauge	.054	.0	.002	.0063	.1	.22	38.24
B	D	Armature,Starter	Diameter	Snap Gauge	.054	.0	.002	.0063	.1	.22	38.24
B	E	Armature,Starter	Depth	Depth Gauge	.054	.0	.0042	.0063	.1	.22	38.46
A	B	Block Assm.	Flatness	Strtedge&Feeler	.072	.0152	.0016	.0076	.1	.22	41.65
A	C	Block Assm.	Flatness	Strtedge&Feeler	.072	.0152	.0016	.0076	.1	.22	41.65
B	B	WasherThrust,C'Sft	Surface Condition	Visual	.027	.0	.0016	.0045	.05	.33	41.32
B	C	Hub,BlowerDrGear	Condition of Serr.	Visual	.036	.0	.0016	.0041	.05	.33	42.18
B	B	Washer,Thrust,BlDr	Surface Condition	Visual	.036	.0	.0016	.0041	.05	.33	42.18
B	B	Hub,Fuel Pump	Surface Condition	Visual	.045	.0	.002	.0038	.05	.33	43.08
B	A	LeverAssm,Starter	Diameter	Plug Gauge	.045	.0	.002	.0035	.05	.33	43.05
B	A	Support,BlowerDr.	Surface Condition	Visual	.045	.0	.0016	.0041	.05	.33	43.08
B	B	Hub,BlowerDrGear	Surface Condition	Visual	.054	.0	.0016	.0041	.05	.33	43.98
A	M	Block Assm.	Flatness of C'Bore	Depth Bore Gauge	.081	.0152	.0021	.0229	.1	.22	44.14
B	B	ShaftAssm,RkrArm	Surface Condition	Visual	.036	.0	.0016	.0233	.05	.33	44.09
B	A	Hub,BlowerDrGear	Diameter	Dial Bore Gauge	.063	.0	.002	.0041	.05	.33	44.92
B	C	GearAssm,Idler	GearTeethCondition	Visual	.027	.0	.0016	.0044	.1	.33	46.30
B	B	Bearing Sleeve	Surface Condition	Visual	.063	.0	.0016	.0233	.05	.33	46.79
B	B	Washer,Thrust	Surface Condition	Visual	.036	.0	.0016	.0077	.1	.33	47.54
B	C	Arm Assm,Valve Rkr	Surface Condition	Visual	.045	.0	.0016	.0466	.05	.33	47.33
B	C	Arm Assm,Valve Rkr	Surface Condition	Visual	.045	.0	.0016	.0466	.05	.33	47.33
B	C	Bushing,Sleeve	Surface Condition	Visual	.036	.0	.0016	.0035	.1	.33	47.11
B	B	Frame Assm,ComEnd	Surface Condition	Visual	.036	.0	.0016	.0035	.1	.33	47.11
B	C	Frame Assm,ComEnd	Surface Condition	Visual	.036	.0	.0016	.0035	.1	.33	47.11
B	C	Drive,StarterPin.	Surface Condition	Visual	.036	.0	.0016	.0035	.1	.33	47.11
A	G	Block Assm.	Taper of Bore	Dial Bore Gauge	.09	.0050	.0014	.0687	.1	.22	48.52
B	B	Gear,Timing,C'Shft	GearTeethCondition	Visual	.045	.0	.0032	.0042	.1	.33	48.24
B	B	GearAssm,FuelPump	Surface Condition	Visual	.045	.0	.0008	.0076	.1	.33	48.34
B	C	GearAssm,FuelPump	GearTeethCondition	Visual	.045	.0	.0016	.0038	.1	.33	48.04
B	A	Washer,StarterArm.	Thickness	Snap Gauge	.045	.0	.002	.0035	.1	.33	48.05
B	A	Drive,StarterPin.	Diameter	Dial Bore Gauge	.054	.0	.0023	.0035	.1	.33	48.99
B	B	Drive,StarterPin.	Condition of Teeth	Visual	.045	.0	.0016	.0035	.1	.33	48.01
B	A	Shaft,ShiftLever	Diameter	Dial Snap Gauge	.054	.0	.002	.0035	.1	.33	48.95
B	A	Bushing,Bearing	Diameter	Dial Bore Gauge	.054	.0	.0024	.0035	.1	.33	48.99
B	B	Bushing,Bearing	Diameter	Dial Snap Gauge	.054	.0	.002	.0035	.1	.33	48.95
B	A	Gear,Helix,BlDr	Gear Teeth Cond.	Visual	.045	.0	.0016	.0041	.1	.33	48.08
A	3-80b	Assembly of Engine	Backlash	Dial Indicator	.054	.0	.0048	.0038	.1	.33	49.27
B	A	Gear,Timing,C'Shft	Diameter	Dial Bore Gauge	.054	.0	.0043	.0042	.1	.33	49.26
B	A	WasherThrust,Idler	Thickness	Dial Snap Gauge	.054	.0	.0024	.0044	.1	.33	49.08
B	B	GearHelical,C'Sft	Surface Condition	Visual	.054	.0	.0016	.0044	.1	.33	49.00
B	B	GearHelical,C'Sft	Surface Condition	Visual	.054	.0	.0016	.0044	.1	.33	49.00
B	C	GearHelical,C'Sft	GearTeethCondition	Visual	.054	.0	.0016	.0044	.1	.33	49.00
B	C	GearHelical,C'Sft	GearTeethCondition	Visual	.054	.0	.0016	.0044	.1	.33	49.00

Table 5.1 (continued)

Normalized & Weighted Implementation Prioritization Table

05/05/83 GARD, Inc.
Sorted by: 49.99 Page No. 2

Apdx.	REF	Item	Characteristic	Method of Inspection	Cplx/ Skill	Error Prob.	Perf. Time	Test Volume	Fab. Crit.	Perf. Crit.	DERIVED PRIORITY(X100)
B	B	Arm Assm.	Surface Condition	Visual	.045	.0	.0016	.0233	.1	.33	49.99
B	C	Arm Assm.	Surface Condition	Visual	.045	.0	.0016	.0233	.1	.33	49.99
B	A	GearAssm,FuelPump	Diameter	Dial Bore Gauge	.054	.0	.0043	.0038	.1	.33	49.22
B	A	Hub,Fuel Pump	Diameter	Dial Snap Gauge	.054	.0	.004	.0038	.1	.33	49.18
B	A	Washer,Thrust	Thickness	Snap Gauge	.054	.0	.004	.0038	.1	.33	49.18
B	A	Frame Assm,ComEnd	Diameter	Dial Bore Gauge	.054	.0	.0044	.0035	.1	.33	49.19
B	A	Washer.StarterPin.	Thickness	Snap Gauge	.054	.0	.002	.0042	.1	.33	49.02
B	A	Washer,Thrust,BlDr	Thickness	Dial Snap Gauge	.054	.0	.002	.0041	.1	.33	49.02
A	A	Cylinder Head Assm	Leakage	Pressure Test	.09	.0	.0294	.0077	.05	.33	50.72
A	B	Cylinder Head Assm	Flatness	Strghtedge&Feeler	.072	.0074	.0016	.0466	.05	.33	50.78
A	C	Cylinder Head Assm	Flatness	Strghtedge&Feeler	.072	.0049	.0016	.0466	.05	.33	50.53
B	F	Armature,Starter	Runout	Surf Plate&V-Block	.063	.0	.0056	.0063	.1	.33	50.50
B	B	Gear,Helix,BlDr	Diameter	Dial Snap Gauge	.072	.0	.0023	.0041	.1	.33	50.85
A	G	Crankshaft Assm.	Diameter	Micrometer	.081	.0	.0008	.0004	.1	.33	51.22
A	3-75d	Assembly of Engine	End Play	Dial Indicator	.072	.0	.0048	.0038	.1	.33	51.07
B	A	GearAssm,Idler	Diameter	Dial Bore Gauge	.081	.0	.0043	.0044	.1	.33	51.97
B	A	Hub,Idler Gear	Diameter	Dial Snap Gauge	.081	.0	.004	.0044	.1	.33	51.94
B	A	ShaftAssm,RkrArm	Diameter	Dial Snap Gauge	.054	.0	.004	.0233	.1	.33	51.13
B	A	Arm Assm.	Diameter	Dial Bore Gauge	.054	.0	.0040	.0233	.1	.33	51.14
B	B	Arm Assm,Valve Rkr	Surface Condition	Visual	.045	.0	.0016	.0466	.1	.33	52.33
B	B	Arm Assm,Valve Rkr	Surface Condition	Visual	.045	.0	.0016	.0466	.1	.33	52.33
A	C	Piston Assm	Surface Condition	Visual	.054	.0228	.0024	.0254	.1	.33	53.47
A	D	Piston Assm	Surface Condition	Visual	.054	.0228	.0024	.0254	.1	.33	53.47
A	E	Sleeve,Cyl.Liner	Surface Condition	Visual	.054	.0228	.0016	.0254	.1	.33	53.39
A	F	Sleeve,Cyl.Liner	Surface Condition	Visual	.054	.0228	.0016	.0254	.1	.33	53.39
A	B	Camshaft Assm,Left	Diameter	Micrometer	.081	.0	.0128	.0077	.1	.33	53.16
A	B	Camshaft Assm,Rght	Diameter	Micrometer	.081	.0	.0128	.0077	.1	.33	53.16
A	F	Cylinder Head Assm	Surface Condition	Visual	.072	.0083	.0016	.07	.05	.33	53.19
A	G	Cylinder Head Assm	Thickness	Micrometer	.081	.0599	.0016	.0077	.05	.33	53.03
B	A	Bearing Sleeve	Diameter	Dial Bore Gauge	.081	.0	.0040	.0233	.1	.33	53.84
B	B	Guide,Poppet Valve	Surface Condition	Visual	.063	.0	.0016	.0933	.05	.33	53.79
B	A	Housing,Starter	Diameter	Dial Bore Gauge	.045	.0	.0024	.0035	.15	.33	53.09
B	B	Bushing,Sleeve	Diameter	Dial Snap Gauge	.045	.0	.0023	.0035	.15	.33	53.09
B	G	Armature,Starter	SplineTeethCond.	Visual	.045	.0	.0016	.0063	.15	.33	53.30
A	*F	Crankshaft Assm.	Surface Finish	Surface Analyzer	.081	.0077	.0011	.0262	.1	.33	54.62
B	A	WasherThrust,C'Sft	Thickness	Dial Snap Gauge	.054	.0	.0016	.0045	.15	.33	54.02
B	B	Hub,Idler Gear	Surface Condition	Visual	.027	.1318	.0016	.0044	.05	.33	54.49
B	A	Washer,Thrust	Thickness	Dial Snap Gauge	.054	.0	.002	.0077	.15	.33	54.38
B	C	Follower Assm.	DiametricClearance	Feeler Gauge	.045	.0	.0016	.07	.1	.33	54.66
B	D	Follower Assm.	Clearance, Side	Feeler Gauge	.054	.0416	.0016	.07	.05	.33	54.72
B	A	Arm Assm,Valve Rkr	Diameter	Dial Bore Gauge	.063	.0	.0040	.0466	.1	.33	54.37
B	A	Arm Assm,Valve Rkr	Diameter	Dial Bore Gauge	.063	.0	.0040	.0466	.1	.33	54.37
B	A	Bushing,Sleeve	Diameter	Dial Bore Gauge	.054	.0	.0043	.0035	.15	.33	54.19
B	A	Armature,Starter	Diameter	Dial Snap Gauge	.054	.0	.002	.0063	.15	.33	54.24
B	C	Armature,Starter	Diameter	Dial Snap Gauge	.054	.0	.002	.0063	.15	.33	54.24
A	Q	Block Assm.	Diameter	Dial Bore Gauge	.081	.0152	.0016	.0305	.1	.33	55.84
A	*C	Crankshaft Assm.	Roundness	Micrometer	.09	.0044	.0008	.0262	.1	.33	55.15
A	*D	Crankshaft Assm.	Taper	Micrometer	.09	.0088	.0008	.0262	.1	.33	55.60
A	D	Rod Assm,Piston	Physical Condition	Visual	.072	.0249	.0022	.0233	.1	.33	55.25
B	A	Pin,Piston	Diameter	Dial Snap Gauge	.072	.0228	.0016	.0254	.1	.33	55.19
B	A	GearHelical,C'Sft	Diameter	Dial Bore Gauge	.063	.0	.0043	.0044	.15	.33	55.17
B	A	GearHelical,C'Sft	Diameter	Dial Bore Gauge	.063	.0	.0043	.0044	.15	.33	55.17

Table 5.1 (continued)

Normalized & Weighted Implementation Prioritization Table

05/05/83
Sorted by: 56.04

GARD, Inc.
Page No. 3

Apdx.	REF	Item	Characteristic	Method of Inspection	Cplx/ Skill	Error Prob.	Perf. Time	Test Volume	Fab. Crit.	Perf. Crit.	DERIVED PRIORITY(X100)
A	A	Rod Assm,Piston	Diameter	Dial Bore Gauge	.081	.0249	.0010	.0233	.1	.33	56.04
A	B	Rod Assm,Piston	Diameter	Dial Bore Gauge	.081	.0249	.0010	.0233	.1	.33	56.04
A	A	Piston Assm	Diameter	Micrometer	.081	.0228	.0012	.0254	.1	.33	56.06
A	E	Piston Assm	Surface Condition	Visual & Feeler	.063	.0457	.004	.0254	.1	.33	56.82
A	A	Sleeve,Cyl.Liner	Diameter	Micrometer	.081	.0228	.0016	.0254	.1	.33	56.09
A	B	Sleeve,Cyl.Liner	Diameter	Dial Bore Gauge	.081	.0228	.0016	.0254	.1	.33	56.10
A	3-76b	Assembly of Engine	Depth	Depth Gauge	.081	.0249	.0018	.0233	.1	.33	56.12
B	B	Follower Assm.	Diameter	Dial Snap Gauge	.063	.0	.004	.07	.1	.33	56.70
A	E	Crankshaft Assm.	Runout	Surf Plat&V-Block	.09	.0	.0034	.0008	.15	.33	57.43
A	K	Crankshaft Assm.	Radius	Radius Gauge	.09	.0044	.0008	.0525	.1	.33	57.79
A	C	Rod Assm,Piston	Length	Surface Plate	.09	.0249	.0035	.0233	.1	.33	57.19
B	A	Follower Assm.	Diameter	Dial Snap Gauge	.063	.0083	.004	.07	.1	.33	57.53
B	H	Armature,Starter	Surface Condition	Visual	.045	.0915	.0016	.0063	.1	.33	57.45
A	J	Block Assm.	Diameter	Dial Bore Gauge	.081	.0076	.0020	.0152	.15	.33	58.60
A	L	Block Assm.	Diameter	Dial Bore Gauge	.072	.0152	.0016	.0152	.15	.33	58.42
A	D	Sleeve,Cyl.Liner	Taper	Dial Bore Gauge	.081	.0457	.0024	.0254	.1	.33	58.47
A	A	Camshaft Assm,Left	Diameter	Micrometer	.081	.0374	.0032	.0311	.1	.33	58.28
A	C	Camshaft Assm,Left	Runout	Vee Block,Surf Plt	.081	.0	.0095	.0155	.15	.33	58.61
A	A	Camshaft Assm,Rght	Diameter	Micrometer	.081	.0374	.0032	.0311	.1	.33	58.28
A	C	Camshaft Assm,Rght	Runout	Surf Plate&V-Block	.081	.0	.0095	.0155	.15	.33	58.61
B	B	Exhaust Valve	Surface Condition	Visual	.063	.0	.0016	.0933	.1	.33	58.79
B	C	Exhaust Valve	Surface Condition	Visual	.063	.0	.0016	.0933	.1	.33	58.79
A	E	Block Assm.	Diameter	Dial Bore Gauge	.081	.0101	.0015	.0229	.15	.33	59.56
A	F	Block Assm.	Diameter	Dial Bore Gauge	.081	.0101	.0015	.0229	.15	.33	59.56
A	K	Block Assm.	Diameter	Dial Bore Gauge	.072	.0228	.0016	.0152	.15	.33	59.18
A	N	Block Assm.	Depth of C'Bore	Depth Gauge	.063	.0254	.0021	.0229	.15	.33	59.35
A	E	Rod Assm,Piston	Straightness	Surface Plate	.09	.0499	.0035	.0233	.1	.33	59.68
A	B	Piston Assm	Diameter	Dial Bore Gauge	.081	.0343	.0013	.0509	.1	.33	59.76
A	D	Block Assm.	Diameter	Dial Bore Gauge	.081	.0152	.0015	.0229	.15	.33	60.07
A	P	Block Assm.	Diameter of C'Bore	Dial Bore Gauge	.081	.0152	.0021	.0229	.15	.33	60.14
A	C	Sleeve,Cyl.Liner	Roundness	Dial Bore Gauge	.081	.0686	.0024	.0254	.1	.33	60.76
B	D	Exhaust Valve	Thickness	Scale	.081	.0	.0040	.0933	.1	.33	60.83
A	*B	Crankshaft Assm.	Diameter	Micrometer	.09	.0310	.0008	.0112	.15	.33	61.31
A	H	Crankshaft Assm.	Surface Condition	Visual	.072	.1047	.0008	.0033	.1	.33	61.09
B	E	Follower Assm.	Surface Condition	Visual	.045	.0	.0008	.14	.1	.33	61.58
B	A	Exhaust Valve	Diameter	Dial Snap Gauge	.081	.0124	.004	.0933	.1	.33	62.08
B	E	Exhaust Valve	Item Condition	Visual	.081	.0187	.0016	.0933	.1	.33	62.47
B	A	Guide,Poppet Valve	Diameter	Dial Bore Gauge	.081	.0124	.0040	.0933	.1	.33	62.08
B	B	Support,BlowerDr.	Diameter	Dial Bore Gauge	.045	.1396	.0043	.0041	.1	.33	62.32
A	H	Block Assm.	Roundness of Bore	Dial Bore Gauge	.081	.0050	.0014	.0687	.15	.33	63.62
A	*A	Crankshaft Assm.	Diameter	Micrometer	.09	.0465	.0008	.0150	.15	.33	63.24
A	D	Camshaft Assm,Left	Surface Condition	Visual	.072	.0267	.0008	.1088	.1	.33	63.85
A	D	Camshaft Assm,Rght	Surface Condition	Visual	.072	.0267	.0008	.1088	.1	.33	63.85
A	E	Cylinder Head Assm	Diameter of CamFol	Plug Gauge	.081	.0066	.0016	.07	.15	.33	63.93
A	3-74b	Assembly of Engine	Fit	Micrometer & DBG	.09	.0468	.0012	.0622	.1	.33	63.03
A	J	Crankshaft Assm.	Surface Condition	Visual	.072	.1396	.0008	.0008	.1	.33	64.33
A	3-91c1	Assembly of Engine	Backlash	Hardness Tester	.054	.1498	.0048	.0038	.1	.33	64.25
B	I	Armature,Starter	Shorts&Grounds	Electrical	.063	.0915	.0044	.0063	.15	.33	64.54
A	D	Cylinder Head Assm	Diameter of C'Bore	Dial Bore Gauge	.081	.0037	.0016	.0933	.15	.33	65.97
A	3-91c4	Assembly of Engine	Concentricity	Dividing Head	.063	.1498	.0064	.0038	.1	.33	65.31
A	A	Block Assm.	Leakage	Pressure Test	.09	.0	.14	.0000	.15	.33	71.01

Table 5.1 (continued)

Normalized & Weighted Implementation Prioritization Table

05/05/83 GARD, Inc.

Sorted by: Page No. 4

Apdx.	REF	Item	Characteristic	Method of Inspection	Cplx/ Skill	Error Prob.	Perf. Time	Test Volume	Fab. Crit.	Perf. Crit.	DERIVED PRIORITY(X100)
											8063.60

RECORDS SELECTED 155

5.3.1 Preliminary Conceptual Gauging Systems

The capabilities of the preliminary conceptual gauging systems were based upon literature searches of current applicable technology, discussions with vendors, and demonstration of various techniques. This information was reduced to five generic gauging approaches: Electronic, Video, Video with Moving Stage, Laser, and Surface. A more detailed description of each conceptual gauging system follows.

Conceptual Automatic Gauging System - Electronic

System Description - The system is based upon using electronic precision measuring devices in conjunction with a robotic movement system. In practice the part to be measured is placed in position on a work table and the robot arm then moves the precision measuring device to the correct place on the part to obtain the dimension required.

Primary Gauging Sensor - Electronic gauges such as bore gauges, O.D. gauges, depth gauges, and LVDT's.

Movements Required - Sensor Only

Method(s) of Movement(s) - Robot

Part Fixturing - The part would be stationary on a magnetic holding table.

Programming Requirements:

To perform measurement - not required

To move sensor - yes (robot)

To move part - not required

To store measurement - yes

Risk - Low, proven technology.

Adaptability - High, due to versatility of robot motions.

Automation Feasibility - High, due to ease of programming required motions.

Relative Estimated System Cost - .54 (not including development cost).

Estimated Weight - Approximately 800 lbs.

Comments - This conceptual gauging system has the required precision needed to gauge the required dimensions on the 6V53 engine, since it uses precision discrete electronic gauging devices. However, a specific gauging device is required for each measurement made. These gauging devices are relatively low cost when compared to other precision gauging instruments. An advantage of this system is that special part handling fixtures are not required because of the versatility of motions available to the robot arm.

Conceptual Automatic Gauging System - Video

System Description - This system is based upon a video camera which is moved to the proper position relative to the part before the measurement is acquired. In some cases it may be necessary to also move the part being gauged due to a more limited number of motions available to the video camera movement system.

Primary Gauging Sensor - Video Camera

Movements Required - Sensor and part

Method(s) of Movement(s) - Dedicated motorized fixtures. (Note: robotic system movements are currently not accurate enough for use with this video system.)

Part Fixturing - Special motorized and static fixtures.

Programming Requirements:

To perform measurement - Yes

To move sensor - Yes

To move part - Yes

To store measurement - Yes

Risk - Medium, this conceptual system has been somewhat implemented in industry.

Adaptability - Medium, a new part geometry may require a special fixture to handle that part.

Automation Feasibility - Medium, parts must be handled with more input from the operator.

Estimated Weight - Approximately 1,500 lbs.

Relative Estimated System Cost - .80 (not including development cost)

Comments - This system, while potentially very useful, has the serious drawback of not being able to easily measure inside diameters below a surface. Since a number of measurements on the 6V53 engine require inside diameters, tapers, and concentricity measurements, a method would have to be developed to adapt this system to those measurements.

Conceptual Automatic Gauging System - Video Stage

System Description - This system is based upon a video camera and a precision motorized stage. The part to be measured would be accurately located upon the stage and the video camera used as a edge finder (i.e.,"touch probe")for the system. The precision dimension measurement would be obtained through the stage itself rather than through the video camera.

Primary Gauging Sensor - Video camera/precision stage

Movements Required - Part only

Method(s) of Movement(s) - Motorized precision stage and fixtures

Part Fixturing - Mechanical fixtures attached to the stage and special motorized fixtures for items with measurements on more than one plane.

Programming Requirements:

To perform measurements - Yes

To move sensor - Not required

To move part - Yes

To store measurement - Yes

Risk - Medium/low, there are several commercially available, potentially applicable systems available.

Adaptability - Medium/high, if part size does not exceed the maximum capacity of the system; the system can be reprogrammed for the part. In some cases a new part would also require a new special fixture.

Automation Feasibility - High, since both the stage movement and any special fixture movement can be programmed.

Estimated Weight - Approximately 2500 lbs.

Relative Estimated System Cost - 1.0 (not including development cost)

Comments - Of the two video gauging systems this is potentially the more useful since much of the design has been done commercially. However, for normal commercial applications the parts tend to be small and have the required measurement surfaces in one plane. To use this for the 6V53 engine program, special fixtures would be required to position the part with reference to the video camera. Also, below surface measurements would be difficult.

Conceptual Automatic Gauging System - Laser

System Description - This system is based upon a laser profile gauge and a precision parts handling fixture. The part to be gauged is first placed into a fixture and is then moved by the fixture into the field of view of the laser. The required dimension is obtained by converting the shadow of the part to dimensional information.

Primary Gauging Sensor - Laser

Movement(s) Required - Part only

Method(s) of Movement(s) - Motorized precision fixtures

Part Fixturing - Special motorized and static fixtures

Programming Requirements:

To perform measurement - Not required

To move sensor - Not required

To move part - Yes

To store measurement - Yes

Risk - Low, current commercial system use of lasers for profile measurements.

Adaptability - Low/med, while this system could be used to perform measurements within its field of view, it can not be used for non-profile type of measurements.

Automation Feasibility - Low/med., because this type of system is very dependent upon part geometry and complicated part handling systems.

Estimated Weight - Approximately 1,300 lbs.

Relative Estimated System Cost - .66 (not including development cost)

Comments - This conceptual system is more oriented toward a specific part geometry and is more suitable for a production line situation.

Conceptual Automatic Gauging System - Surface

System Description - This system is based upon a technique of "looking" at a surface with a video camera. The system records the image of the surface and then the image is analyzed and compared to a known good value. The known good value is determined either by examining a good part or by comparison to an image of a good part in memory. A tolerance or deviation from the good image is then used so the system can make a decision regarding the quality of the inspected surface.

Primary Gauging Sensor - Video camera

Movement(s) Required - Sensor only

Method(s) of Movement(s) - Robot

Part Fixturing - The part would be stationary on a magnetic table.

Programming Requirements:

To perform measurement - Yes

To move sensor - Yes (robot)

To move part - Not required

To store measurement - Yes

Risk - Low, this method of making surface quality judgements is in commercial use.

Adaptability - High, the system is not part geometry dependent.

Automation Feasibility - High, since this is a non-contact high speed method.

Estimated Weight - Approximately 700 lbs.

Relative Estimated System Cost - .48 (not including development cost)

Comments - This is a system which would be used where visual inspection is called for. It is estimated to be used for judging surface quality rather than to make actual surface finish measurements.

5.3.2 Commonality Assignment

After the preliminary conceptual gauging systems and their estimated capabilities were defined, the next step was to go through each prioritized measurement and assign the applicable gauging approach (or approaches) which could be used to perform that particular measurement. Tables 5.2 through 5.7 show the results of the assignments. Each table lists all the prioritized measurements which can be performed with a specific gauging approach (and any other applicable approach).

An explanation of the column headings on the Commonality Analysis forms follow:

Apdx: Refers to which "Appendix" the item was found in.

REF: Refers to a particular entry in the DMWR.

Item: Part name.

Characterisitc: Measurement to be made.

Method of Inspection: The inspection method currently specified in the DMWR.

Gauging Approach:

V - Video includes all video methods such as one camera, two camera.

S - Video Stage includes video methods where the measurement is obtained from the movement of a stage or mechanical device.

F - Electronic includes electronic gauges such as depth, ID, OD, LVDT, capacitance, etc.

L - Laser includes laser gauges, primarily laser profile gauges and laser gauges for flatness.

S - Surface Instrument includes instruments to measure surface finish, and roughness.

O - Other includes methods to measure pressure, hardness, etc. (a generic category included to cover various measurements obviously inapplicable to the automatic gauging concept being developed herein, but needed to provide an overview of their relative significance to the inspection application).

5.3.3 Ranking Analysis

Analysis of Tables 5.2 to 5.7 by TACOM, RRAD, and GARD resulted in the conclusion that all Depot measurements which currently use "Visual" and "Other" techniques should be removed from the data base to better reflect automatic gauging concept commonality and ultimate use. This change made it necessary to recalculate the numerical values which are used to determine individual weighted measurement priorities. A new Normalized and Weighted Implementation Prioritization Table which reflects these changes was generated. Tables 5.8 and 5.9 show the results.

The gauging technique Commonality Analysis also required re-doing. This analysis provided a new Total Priority value for each applicable gauging technique. The computer printouts from the new Commonality Analysis and Prioritization Table are included as Tables 5.10 to 5.14. The change in results due to the data base change is summarized below.

TOTALS

	# Measurements	Total Priority Value
With Visual & Other (old data base)	155	8064
Without Visual & Other (new data base)	95	5241
Percent Change	-39	-35

INDIVIDUAL VALUES (New Data Base)

Technique	#Measurements	Priority Value	Percent Total Priority
Video	48	2632	49.5
Video-Stage	48	2632	49.5
Electronic	94	5203	97.9
Laser	49	2647	49.8
Surface	1	55	1.0

Since the re-analysis shows that the Surface measurement technique now accounts for only 1 percent of the total priority, it was not considered in the next analysis.

Table 5.2 Video

Commonality Analysis

05/13/83 GARD,Inc.
Sorted by: 30.30 Page No. 1

Apdx.	REF	Item	Characteristic	Method of Inspection	Gauging Approach VSELSO △	Derived Priority	Record Number
B	B	WasherThrust,Idler	Surface Condition	Visual	XX XX	30.30	206
B	B	Washer,StarterArm.	Surface Condition	Visual	XX	31.11	264
B	B	LeverAssm,Starter	Surface Condition	Visual	XX	31.11	271
B	C	LeverAssm,Starter	Item Condition	Visual	XX	31.11	272
B	B	Shaft,ShiftLever	Surface Condition	Visual	XX XX	31.11	274
B	C	Bushing,Bearing	Surface Condition	Visual	XX XX	31.11	277
B	B	Washer,StarterPin.	Surface Condition	Visual	XX	31.53	269
B	B	Washer,Thrust	Surface Condition	Visual	XX XX	31.56	246
B	B	GearAssm,Idler	Surface Condition	Visual	XX XX	35.30	200
B	D	GearAssm,Idler	Surface Condition	Visual	XX XX	35.30	202
B	B	Armature,Starter	Diameter	Dial Snap Gauge	XXXX	38.24	255
B	D	Armature,Starter	Diameter	Snap Gauge	XXXX	38.24	257
B	B	WasherThrust,C'Sft	Surface Condition	Visual	XX XX	41.32	198
B	C	Hub,BlowerDrGear	Condition of Serr.	Visual	XX	42.18	283
B	B	Washer,Thrust,BlDr	Surface Condition	Visual	XX XX	42.18	287
B	A	LeverAssm,Starter	Diameter	Plug Gauge	XXX	43.05	270
B	B	Hub,Fuel Pump	Surface Condition	Visual	XXXX	43.08	36
B	A	Support,BlowerDr.	Surface Condition	Visual	XX XX	43.08	278
B	B	Hub,BlowerDrGear	Surface Condition	Visual	XX XX	43.98	282
B	B	ShaftAssm,RkrArm	Surface Condition	Visual	XX XX	44.09	237
B	A	Hub,BlowerDrGear	Diameter	Dial Bore Gauge	XXXX	44.92	281
B	C	GearAssm,Idler	GearTeethCondition	Visual	XX	46.30	201
B	B	Bearing Sleeve	Surface Condition	Visual	XX XX	46.79	209
B	C	Bushing,Sleeve	Surface Condition	Visual	XX XX	47.11	250
B	B	Frame Assm,ComEnd	Surface Condition	Visual	XX XX	47.11	252
B	C	Frame Assm,ComEnd	Surface Condition	Visual	XX XX	47.11	253
B	C	Drive,StarterPin.	Surface Condition	Visual	XX	47.11	267
B	C	Arm Assm,Valve Rkr	Surface Condition	Visual	XX XX	47.33	234
B	C	Arm Assm,Valve Rkr	Surface Condition	Visual	XX XX	47.33	235
B	B	Washer,Thrust	Surface Condition	Visual	XX XX	47.54	217
B	B	Drive,StarterPin.	Condition of Teeth	Visual	XX	48.01	266
B	C	GearAssm,FuelPump	GearTeethCondition	Visual	XX XX	48.04	243
B	A	Gear,Helix,BlDr	Gear Teeth Cond.	Visual	XX	48.08	284
B	B	Gear,Timing,C'Shft	GearTeethCondition	Visual	XXXX	48.24	196
B	B	GearAssm,FuelPump	Surface Condition	Visual	XX XX	48.34	242
B	A	Shaft,ShiftLever	Diameter	Dial Snap Gauge	XXXX	48.95	273
B	B	Bushing,Bearing	Diameter	Dial Snap Gauge	XXXX	48.95	276
B	B	GearHelical,C'Sft	Surface Condition	Visual	XX XX	49.00	212
B	B	GearHelical,C'Sft	Surface Condition	Visual	XX XX	49.00	213
B	C	GearHelical,C'Sft	GearTeethCondition	Visual	XX	49.00	214
B	C	GearHelical,C'Sft	GearTeethCondition	Visual	XX	49.00	215
B	A	Hub,Fuel Pump	Diameter	Dial Snap Gauge	XXXX	49.18	244
B	A	Frame Assm,ComEnd	Diameter	Dial Bore Gauge	XXX	49.19	251
B	A	Gear,Timing,C'Shft	Diameter	Dial Bore Gauge	XXXX	49.26	195
B	B	Arm Assm.	Surface Condition	Visual	XX XX	49.99	239
B	C	Arm Assm.	Surface Condition	Visual	XX XX	49.99	240
B	F	Armature,Starter	Runout	Surf Plate&V-Block	XXXX	50.50	259
B	A	ShaftAssm,RkrArm	Diameter	Dial Snap Gauge	XXXX	51.13	236
A	G	Crankshaft Assm.	Diameter	Micrometer	XXXX	51.22	22
B	A	Hub,Idler Gear	Diameter	Dial Snap Gauge	XXXX	51.94	203
B	A	GearAssm,Idler	Diameter	Dial Bore Gauge	XXXX	51.97	199
B	B	Arm Assm,Valve Rkr	Surface Condition	Visual	XX XX	52.33	232

Table 5.2 (continued)

Commonality Analysis

05/13/83
Sorted by: 52.33

GARD, Inc.
Page No. 2

Apdx.	REF	Item	Characteristic	Method of Inspection	Gauging Approach VSELSO △	Derived Priority	Record Number
B	B	Arm Assm,Valve Rkr	Surface Condition	Visual	XX XX	52.33	233
B	B	Bushing,Sleeve	Diameter	Dial Snap Gauge	XXXX	53.09	249
A	B	Camshaft Assm,Left	Diameter	Micrometer	XXXX	53.16	45
A	B	Camshaft Assm,Rght	Diameter	Micrometer	XXXX	53.16	50
B	G	Armature,Starter	SplineTeethCond.	Visual	XX	53.30	260
A	E	Sleeve,Cyl.Liner	Surface Condition	Visual	XX XX	53.39	42
A	F	Sleeve,Cyl.Liner	Surface Condition	Visual	XX XX	53.39	43
B	B	Guide,Poppet Valve	Surface Condition	Visual	XX XX	53.79	229
B	A	Armature,Starter	Diameter	Dial Snap Gauge	XXXX	54.24	254
B	C	Armature,Starter	Diameter	Dial Snap Gauge	XXXX	54.24	256
B	B	Hub,Idler Gear	Surface Condition	Visual	XX XX	54.49	204
B	C	Follower Assm.	DiametricClearance	Feeler Gauge	XXX	54.66	220
B	D	Follower Assm.	Clearance, Side	Feeler Gauge	XXX	54.72	221
B	A	Pin,Piston	Diameter	Dial Snap Gauge	XXXX	55.19	207
A	*D	Crankshaft Assm.	Taper	Micrometer	XXXX	55.60	19
A	A	Rod Assm,Piston	Diameter	Dial Bore Gauge	XXX	56.04	26
A	B	Rod Assm,Piston	Diameter	Dial Bore Gauge	XXX	56.04	27
A	A	Piston Assm	Diameter	Micrometer	XXXX	56.06	31
A	A	Sleeve,Cyl.Liner	Diameter	Micrometer	XXXX	56.09	38
A	E	Piston Assm	Surface Condition	Visual & Feeler	XX XX	56.82	35
A	C	Rod Assm,Piston	Length	Surface Plate	XX	57.19	28
A	E	Crankshaft Assm.	Runout	Surf Plat&V-Block	XXXX	57.43	20
B	H	Armature,Starter	Surface Condition	Visual	XX	57.45	261
B	A	Follower Assm.	Diameter	Dial Snap Gauge	XXXX	57.53	218
A	K	Crankshaft Assm.	Radius	Radius Gauge	XX	57.79	25
A	A	Camshaft Assm,Left	Diameter	Micrometer	XXXX	58.28	44
A	A	Camshaft Assm,Rght	Diameter	Micrometer	XXXX	58.28	49
A	J	Block Assm.	Diameter	Dial Bore Gauge	X X	58.60	9
A	C	Camshaft Assm,Left	Runout	Vee Block,Surf Plt	XXXX	58.61	46
A	C	Camshaft Assm,Rght	Runout	Surf Plate&V-Block	XXXX	58.61	51
B	B	Exhaust Valve	Surface Condition	Visual	XX XX	58.79	224
B	C	Exhaust Valve	Surface Condition	Visual	XX XX	58.79	225
A	K	Block Assm.	Diameter	Dial Bore Gauge	X X	59.18	10
A	B	Piston Assm	Diameter	Dial Bore Gauge	XXX	59.76	32
A	D	Block Assm.	Diameter	Dial Bore Gauge	X X	60.07	4
A	P	Block Assm.	Diameter of C'Bore	Dial Bore Gauge	X X	60.14	14
B	D	Exhaust Valve	Thickness	Scale	XXX	60.83	226
A	*B	Crankshaft Assm.	Diameter	Micrometer	XXXX	61.31	17
B	E	Follower Assm.	Surface Condition	Visual	XX XX	61.58	222
B	A	Exhaust Valve	Diameter	Dial Snap Gauge	XXXX	62.08	223
B	E	Exhaust Valve	Item Condition	Visual	XXX	62.47	227
A	*A	Crankshaft Assm.	Diameter	Micrometer	XXXX	63.24	16
A	H	Block Assm.	Roundness of Bore	Dial Bore Gauge	X X	63.62	8
A	3-91c4	Assembly of Engine	Concentricity	Dividing Head	XXX	65.31	183
						4825.68	

RECORDS SELECTED 96

Table 5.3 Video-Stage

Commonality Analysis

05/13/83 GARD, Inc.

Sorted by: 30.30 Page No. 1

Apdx.	REF	Item	Characteristic	Method of Inspection	Gauging Approach VSELSO △	Derived Priority	Record Number
B	B	WasherThrust,Idler	Surface Condition	Visual	XX XX	30.30	206
B	B	Washer,StarterArm.	Surface Condition	Visual	XX	31.11	264
B	B	LeverAssm,Starter	Surface Condition	Visual	XX	31.11	271
B	C	LeverAssm,Starter	Item Condition	Visual	XX	31.11	272
B	B	Shaft,ShiftLever	Surface Condition	Visual	XX XX	31.11	274
B	C	Bushing,Bearing	Surface Condition	Visual	XX XX	31.11	277
B	B	Washer,StarterPin.	Surface Condition	Visual	XX	31.53	269
B	B	Washer,Thrust	Surface Condition	Visual	XX XX	31.56	246
B	B	GearAssm,Idler	Surface Condition	Visual	XX XX	35.30	200
B	D	GearAssm,Idler	Surface Condition	Visual	XX XX	35.30	202
B	B	Armature,Starter	Diameter	Dial Snap Gauge	XXXX	38.24	255
B	D	Armature,Starter	Diameter	Snap Gauge	XXXX	38.24	257
B	B	WasherThrust,C'Sft	Surface Condition	Visual	XX XX	41.32	198
B	C	Hub,BlowerDrGear	Condition of Serr.	Visual	XX	42.18	283
B	B	Washer,Thrust,BlDr	Surface Condition	Visual	XX XX	42.18	287
B	A	LeverAssm,Starter	Diameter	Plug Gauge	XXX	43.05	270
B	B	Hub,Fuel Pump	Surface Condition	Visual	XXXX	43.08	36
B	A	Support,BlowerDr.	Surface Condition	Visual	XX XX	43.08	278
B	B	Hub,BlowerDrGear	Surface Condition	Visual	XX XX	43.98	282
B	B	ShaftAssm,RkrArm	Surface Condition	Visual	XX XX	44.09	237
B	A	Hub,BlowerDrGear	Diameter	Dial Bore Gauge	XXXX	44.92	281
B	C	GearAssm,Idler	GearTeethCondition	Visual	XX	46.30	201
B	B	Bearing Sleeve	Surface Condition	Visual	XX XX	46.79	209
B	C	Bushing,Sleeve	Surface Condition	Visual	XX XX	47.11	250
B	B	Frame Assm,ComEnd	Surface Condition	Visual	XX XX	47.11	252
B	C	Frame Assm,ComEnd	Surface Condition	Visual	XX XX	47.11	253
B	C	Drive,StarterPin.	Surface Condition	Visual	XX	47.11	267
B	C	Arm Assm,Valve Rkr	Surface Condition	Visual	XX XX	47.33	234
B	C	Arm Assm,Valve Rkr	Surface Condition	Visual	XX XX	47.33	235
B	B	Washer,Thrust	Surface Condition	Visual	XX XX	47.54	217
B	B	Drive,StarterPin.	Condition of Teeth	Visual	XX	48.01	266
B	C	GearAssm,FuelPump	GearTeethCondition	Visual	XX XX	48.04	243
B	A	Gear,Helix,BlDr	Gear Teeth Cond.	Visual	XX	48.08	284
B	B	Gear,Timing,C'Shft	GearTeethCondition	Visual	XXXX	48.24	196
B	B	GearAssm,FuelPump	Surface Condition	Visual	XX XX	48.34	242
B	A	Shaft,ShiftLever	Diameter	Dial Snap Gauge	XXXX	48.95	273
B	B	Bushing,Bearing	Diameter	Dial Snap Gauge	XXXX	48.95	276
B	B	GearHelical,C'Sft	Surface Condition	Visual	XX XX	49.00	212
B	B	GearHelical,C'Sft	Surface Condition	Visual	XX XX	49.00	213
B	C	GearHelical,C'Sft	GearTeethCondition	Visual	XX	49.00	214
B	C	GearHelical,C'Sft	GearTeethCondition	Visual	XX	49.00	215
B	A	Hub,Fuel Pump	Diameter	Dial Snap Gauge	XXXX	49.18	244
B	A	Frame Assm,ComEnd	Diameter	Dial Bore Gauge	XXX	49.19	251
B	A	Gear,Timing,C'Shft	Diameter	Dial Bore Gauge	XXXX	49.26	195
B	B	Arm Assm.	Surface Condition	Visual	XX XX	49.99	239
B	C	Arm Assm.	Surface Condition	Visual	XX XX	49.99	240
B	F	Armature,Starter	Runout	Surf Plate&V-Block	XXXX	50.50	259
B	A	ShaftAssm,RkrArm	Diameter	Dial Snap Gauge	XXXX	51.13	236
A	G	Crankshaft Assm.	Diameter	Micrometer	XXXX	51.22	22
B	A	Hub,Idler Gear	Diameter	Dial Snap Gauge	XXXX	51.94	203
B	A	GearAssm,Idler	Diameter	Dial Bore Gauge	XXXX	51.97	199
B	B	Arm Assm,Valve Rkr	Surface Condition	Visual	XX XX	52.33	232

Table 5.3 (continued)

Commonality Analysis

05/13/83
Sorted by: 52.33

GARD, Inc.
Page No. 2

Apdx.	REF	Item	Characteristic	Method of Inspection	Gauging Approach VSELSO △	Derived Priority	Record Number
B	B	Arm Assm,Valve Rkr	Surface Condition	Visual	XX XX	52.33	233
B	B	Bushing,Sleeve	Diameter	Dial Snap Gauge	XXXX	53.09	249
A	B	Camshaft Assm,Left	Diameter	Micrometer	XXXX	53.16	45
A	B	Camshaft Assm,Rght	Diameter	Micrometer	XXXX	53.16	50
B	G	Armature,Starter	SplineTeethCond.	Visual	XX	53.30	260
A	E	Sleeve,Cyl.Liner	Surface Condition	Visual	XX XX	53.39	42
A	F	Sleeve,Cyl.Liner	Surface Condition	Visual	XX XX	53.39	43
B	B	Guide,Poppet Valve	Surface Condition	Visual	XX XX	53.79	229
B	A	Armature,Starter	Diameter	Dial Snap Gauge	XXXX	54.24	254
B	C	Armature,Starter	Diameter	Dial Snap Gauge	XXXX	54.24	256
B	B	Hub,Idler Gear	Surface Condition	Visual	XX XX	54.49	204
B	C	Follower Assm.	DiametricClearance	Feeler Gauge	XXX	54.66	220
B	D	Follower Assm.	Clearance, Side	Feeler Gauge	XXX	54.72	221
B	A	Pin,Piston	Diameter	Dial Snap Gauge	XXXX	55.19	207
A	*D	Crankshaft Assm.	Taper	Micrometer	XXXX	55.60	19
A	A	Rod Assm,Piston	Diameter	Dial Bore Gauge	XXX	56.04	26
A	B	Rod Assm,Piston	Diameter	Dial Bore Gauge	XXX	56.04	27
A	A	Piston Assm	Diameter	Micrometer	XXXX	56.06	31
A	A	Sleeve,Cyl.Liner	Diameter	Micrometer	XXXX	56.09	38
A	E	Piston Assm	Surface Condition	Visual & Feeler	XX XX	56.82	35
A	C	Rod Assm,Piston	Length	Surface Plate	XX	57.19	28
A	E	Crankshaft Assm.	Runout	Surf Plat&V-Block	XXXX	57.43	20
B	H	Armature,Starter	Surface Condition	Visual	XX	57.45	261
B	A	Follower Assm.	Diameter	Dial Snap Gauge	XXXX	57.53	218
A	K	Crankshaft Assm.	Radius	Radius Gauge	XX	57.79	25
A	A	Camshaft Assm,Left	Diameter	Micrometer	XXXX	58.28	44
A	A	Camshaft Assm,Rght	Diameter	Micrometer	XXXX	58.28	49
A	C	Camshaft Assm,Left	Runout	Vee Block,Surf Plt	XXXX	58.61	46
A	C	Camshaft Assm,Rght	Runout	Surf Plate&V-Block	XXXX	58.61	51
B	B	Exhaust Valve	Surface Condition	Visual	XX XX	58.79	224
B	C	Exhaust Valve	Surface Condition	Visual	XX XX	58.79	225
A	B	Piston Assm	Diameter	Dial Bore Gauge	XXX	59.76	32
B	D	Exhaust Valve	Thickness	Scale	XXX	60.83	226
A	*B	Crankshaft Assm.	Diameter	Micrometer	XXXX	61.31	17
B	E	Follower Assm.	Surface Condition	Visual	XX XX	61.58	222
B	A	Exhaust Valve	Diameter	Dial Snap Gauge	XXXX	62.08	223
B	E	Exhaust Valve	Item Condition	Visual	XXX	62.47	227
A	*A	Crankshaft Assm.	Diameter	Micrometer	XXXX	63.24	16
A	3-91c4	Assembly of Engine	Concentricity	Dividing Head	XXX	65.31	183
						4524.07	

RECORDS SELECTED 91

Table 5.4 Electronic
Commonality Analysis

05/13/83 GARD, Inc.
Sorted by: 38.24 Page No. 1

Apdx.	REF	Item	Characteristic	Method of Inspection	Gauging Approach VSELSO △	Derived Priority	Record Number
B	B	Armature,Starter	Diameter	Dial Snap Gauge	XXXX	38.24	255
B	D	Armature,Starter	Diameter	Snap Gauge	XXXX	38.24	257
B	E	Armature,Starter	Depth	Depth Gauge	X	38.46	258
A	B	Block Assm.	Flatness	Strtedge&Feeler	XX	41.65	2
A	C	Block Assm.	Flatness	Strtedge&Feeler	XX	41.65	3
B	A	LeverAssm,Starter	Diameter	Plug Gauge	XXX	43.05	270
B	B	Hub,Fuel Pump	Surface Condition	Visual	XXXX	43.08	36
A	M	Block Assm.	Flatness of C'Bore	Depth Bore Gauge	X	44.14	12
B	A	Hub,BlowerDrGear	Diameter	Dial Bore Gauge	XXXX	44.92	281
B	A	Washer,StarterArm.	Thickness	Snap Gauge	X	48.05	263
B	B	Gear,Timing,C'Shft	GearTeethCondition	Visual	XXXX	48.24	196
A	G	Block Assm.	Taper of Bore	Dial Bore Gauge	X	48.52	7
B	A	Shaft,ShiftLever	Diameter	Dial Snap Gauge	XXXX	48.95	273
B	B	Bushing,Bearing	Diameter	Dial Snap Gauge	XXXX	48.95	276
B	A	Drive,StarterPin.	Diameter	Dial Bore Gauge	X	48.99	265
B	A	Bushing,Bearing	Diameter	Dial Bore Gauge	X	48.99	275
B	A	Washer,StarterPin.	Thickness	Snap Gauge	X	49.02	268
B	A	Washer,Thrust,BlDr	Thickness	Dial Snap Gauge	X	49.02	286
B	A	WasherThrust,Idler	Thickness	Dial Snap Gauge	X	49.08	205
B	A	Hub,Fuel Pump	Diameter	Dial Snap Gauge	XXXX	49.18	244
B	A	Washer,Thrust	Thickness	Snap Gauge	X	49.18	245
B	A	Frame Assm.ComEnd	Diameter	Dial Bore Gauge	XXX	49.19	251
B	A	GearAssm,FuelPump	Diameter	Dial Bore Gauge	X	49.22	241
B	A	Gear,Timing,C'Shft	Diameter	Dial Bore Gauge	XXXX	49.26	195
A	3-80b	Assembly of Engine	Backlash	Dial Indicator	X	49.27	189
B	F	Armature,Starter	Runout	Surf Plate&V-Block	XXXX	50.50	259
A	C	Cylinder Head Assm	Flatness	Strghtedge&Feeler	XX	50.53	56
A	B	Cylinder Head Assm	Flatness	Strghtedge&Feeler	XX	50.78	55
B	B	Gear,Helix,BlDr	Diameter	Dial Snap Gauge	X	50.85	285
A	3-75d	Assembly of Engine	End Play	Dial Indicator	X	51.07	186
B	A	ShaftAssm,RkrArm	Diameter	Dial Snap Gauge	XXXX	51.13	236
B	A	Arm Assm.	Diameter	Dial Bore Gauge	X	51.14	238
A	G	Crankshaft Assm.	Diameter	Micrometer	XXXX	51.22	22
B	A	Hub,Idler Gear	Diameter	Dial Snap Gauge	XXXX	51.94	203
B	A	GearAssm,Idler	Diameter	Dial Bore Gauge	XXXX	51.97	199
A	G	Cylinder Head Assm	Thickness	Micrometer	X	53.03	60
B	A	Housing,Starter	Diameter	Dial Bore Gauge	X	53.09	247
B	B	Bushing,Sleeve	Diameter	Dial Snap Gauge	XXXX	53.09	249
A	B	Camshaft Assm,Left	Diameter	Micrometer	XXXX	53.16	45
A	B	Camshaft Assm,Rght	Diameter	Micrometer	XXXX	53.16	50
B	A	Bearing Sleeve	Diameter	Dial Bore Gauge	X	53.84	208
B	A	WasherThrust,C'Sft	Thickness	Dial Snap Gauge	X	54.02	197
B	A	Bushing,Sleeve	Diameter	Dial Bore Gauge	X	54.19	248
B	A	Armature,Starter	Diameter	Dial Snap Gauge	XXXX	54.24	254
B	C	Armature,Starter	Diameter	Dial Snap Gauge	XXXX	54.24	256
B	A	Arm Assm,Valve Rkr	Diameter	Dial Bore Gauge	X	54.37	230
B	A	Arm Assm,Valve Rkr	Diameter	Dial Bore Gauge	X	54.37	231
B	A	Washer,Thrust	Thickness	Dial Snap Gauge	X	54.38	216
B	C	Follower Assm.	DiametricClearance	Feeler Gauge	XXX	54.66	220
B	D	Follower Assm.	Clearance, Side	Feeler Gauge	XXX	54.72	221
A	*C	Crankshaft Assm.	Roundness	Micrometer	XX	55.15	18
B	A	GearHelical,C'Sft	Diameter	Dial Bore Gauge	X	55.17	210

Table 5.4 (continued)

Commonality Analysis

05/13/83
Sorted by: 55.17

GARD, Inc.
Page No. 2

Apdx.	REF	Item	Characteristic	Method of Inspection	Gauging Approach VSELSO △	Derived Priority	Record Number
B	A	GearHelical,C'Sft	Diameter	Dial Bore Gauge	X	55.17	211
B	A	Pin,Piston	Diameter	Dial Snap Gauge	XXXX	55.19	207
A	*D	Crankshaft Assm.	Taper	Micrometer	XXXX	55.60	19
A	Q	Block Assm.	Diameter	Dial Bore Gauge	X	55.84	15
A	A	Rod Assm,Piston	Diameter	Dial Bore Gauge	XXX	56.04	26
A	B	Rod Assm,Piston	Diameter	Dial Bore Gauge	XXX	56.04	27
A	A	Piston Assm	Diameter	Micrometer	XXXX	56.06	31
A	A	Sleeve,Cyl.Liner	Diameter	Micrometer	XXXX	56.09	38
A	B	Sleeve,Cyl.Liner	Diameter	Dial Bore Gauge	X	56.10	39
A	3-76b	Assembly of Engine	Depth	Depth Gauge	X	56.12	187
B	B	Follower Assm.	Diameter	Dial Snap Gauge	X	56.70	219
A	E	Crankshaft Assm.	Runout	Surf Plat&V-Block	XXXX	57.43	20
B	A	Follower Assm.	Diameter	Dial Snap Gauge	XXXX	57.53	218
A	A	Camshaft Assm,Left	Diameter	Micrometer	XXXX	58.28	44
A	A	Camshaft Assm,Rght	Diameter	Micrometer	XXXX	58.28	49
A	L	Block Assm.	Diameter	Dial Bore Gauge	X	58.42	11
A	D	Sleeve,Cyl.Liner	Taper	Dial Bore Gauge	X	58.47	41
A	J	Block Assm.	Diameter	Dial Bore Gauge	X X	58.60	9
A	C	Camshaft Assm,Left	Runout	Vee Block,Surf Plt	XXXX	58.61	46
A	C	Camshaft Assm,Rght	Runout	Surf Plate&V-Block	XXXX	58.61	51
A	K	Block Assm.	Diameter	Dial Bore Gauge	X X	59.18	10
A	N	Block Assm.	Depth of C'Bore	Depth Gauge	X	59.35	13
A	E	Block Assm.	Diameter	Dial Bore Gauge	X	59.56	5
A	F	Block Assm.	Diameter	Dial Bore Gauge	X	59.56	6
A	E	Rod Assm,Piston	Straightness	Surface Plate	X	59.68	30
A	B	Piston Assm	Diameter	Dial Bore Gauge	XXX	59.76	32
A	D	Block Assm.	Diameter	Dial Bore Gauge	X X	60.07	4
A	P	Block Assm.	Diameter of C'Bore	Dial Bore Gauge	X X	60.14	14
A	C	Sleeve,Cyl.Liner	Roundness	Dial Bore Gauge	X	60.76	40
B	D	Exhaust Valve	Thickness	Scale	XXX	60.83	226
A	*B	Crankshaft Assm.	Diameter	Micrometer	XXXX	61.31	17
B	A	Exhaust Valve	Diameter	Dial Snap Gauge	XXXX	62.08	223
B	A	Guide,Poppet Valve	Diameter	Dial Bore Gauge	X	62.08	228
B	B	Support,BlowerDr.	Diameter	Dial Bore Gauge	X	62.32	280
B	E	Exhaust Valve	Item Condition	Visual	XXX	62.47	227
A	3-74b	Assembly of Engine	Fit	Micrometer & DBG	X	63.03	185
A	*A	Crankshaft Assm.	Diameter	Micrometer	XXXX	63.24	16
A	H	Block Assm.	Roundness of Bore	Dial Bore Gauge	X X	63.62	8
A	E	Cylinder Head Assm	Diameter of CamFol	Plug Gauge	X	63.93	58
A	3-91c1	Assembly of Engine	Backlash	Hardness Tester	X	64.25	182
A	3-91c4	Assembly of Engine	Concentricity	Dividing Head	XXX	65.31	183
A	D	Cylinder Head Assm	Diameter of C'Bore	Dial Bore Gauge	X	65.97	57
						5084.23	

RECORDS SELECTED 94

Table 5.5 Laser
Commonality Analysis

05/13/83 GARD, Inc.
Sorted by: 30.30 Page No. 1

Apdx.	REF	Item	Characteristic	Method of Inspection	Gauging Approach VSELSO △	Derived Priority	Record Number
B	B	WasherThrust,Idler	Surface Condition	Visual	XX XX	30.30	206
B	B	Shaft,ShiftLever	Surface Condition	Visual	XX XX	31.11	274
B	C	Bushing,Bearing	Surface Condition	Visual	XX XX	31.11	277
B	B	Washer,Thrust	Surface Condition	Visual	XX XX	31.56	246
B	B	GearAssm,Idler	Surface Condition	Visual	XX XX	35.30	200
B	D	GearAssm,Idler	Surface Condition	Visual	XX XX	35.30	202
B	B	Armature,Starter	Diameter	Dial Snap Gauge	XXXX	38.24	255
B	D	Armature,Starter	Diameter	Snap Gauge	XXXX	38.24	257
B	B	WasherThrust,C'Sft	Surface Condition	Visual	XX XX	41.32	198
A	B	Block Assm.	Flatness	Strtedge&Feeler	XX	41.65	2
A	C	Block Assm.	Flatness	Strtedge&Feeler	XX	41.65	3
B	B	Washer,Thrust,BlDr	Surface Condition	Visual	XX XX	42.18	287
B	B	Hub,Fuel Pump	Surface Condition	Visual	XXXX	43.08	36
B	A	Support,BlowerDr.	Surface Condition	Visual	XX XX	43.08	278
B	B	Hub,BlowerDrGear	Surface Condition	Visual	XX XX	43.98	282
B	B	ShaftAssm,RkrArm	Surface Condition	Visual	XX XX	44.09	237
B	A	Hub,BlowerDrGear	Diameter	Dial Bore Gauge	XXXX	44.92	281
B	B	Bearing Sleeve	Surface Condition	Visual	XX XX	46.79	209
B	C	Bushing,Sleeve	Surface Condition	Visual	XX XX	47.11	250
B	B	Frame Assm,ComEnd	Surface Condition	Visual	XX XX	47.11	252
B	C	Frame Assm,ComEnd	Surface Condition	Visual	XX XX	47.11	253
B	C	Arm Assm,Valve Rkr	Surface Condition	Visual	XX XX	47.33	234
B	C	Arm Assm,Valve Rkr	Surface Condition	Visual	XX XX	47.33	235
B	B	Washer,Thrust	Surface Condition	Visual	XX XX	47.54	217
B	C	GearAssm,FuelPump	GearTeethCondition	Visual	XX XX	48.04	243
B	B	Gear,Timing,C'Shft	GearTeethCondition	Visual	XXXX	48.24	196
B	B	GearAssm,FuelPump	Surface Condition	Visual	XX XX	48.34	242
B	A	Shaft,ShiftLever	Diameter	Dial Snap Gauge	XXXX	48.95	273
B	B	Bushing,Bearing	Diameter	Dial Snap Gauge	XXXX	48.95	276
B	B	GearHelical,C'Sft	Surface Condition	Visual	XX XX	49.00	212
B	B	GearHelical,C'Sft	Surface Condition	Visual	XX XX	49.00	213
B	A	Hub,Fuel Pump	Diameter	Dial Snap Gauge	XXXX	49.18	244
B	A	Gear,Timing,C'Shft	Diameter	Dial Bore Gauge	XXXX	49.26	195
B	B	Arm Assm.	Surface Condition	Visual	XX XX	49.99	239
B	C	Arm Assm.	Surface Condition	Visual	XX XX	49.99	240
B	F	Armature,Starter	Runout	Surf Plate&V-Block	XXXX	50.50	259
A	C	Cylinder Head Assm	Flatness	Strghtedge&Feeler	XX	50.53	56
A	B	Cylinder Head Assm	Flatness	Strghtedge&Feeler	XX	50.78	55
B	A	ShaftAssm,RkrArm	Diameter	Dial Snap Gauge	XXXX	51.13	236
A	G	Crankshaft Assm.	Diameter	Micrometer	XXXX	51.22	22
B	A	Hub,Idler Gear	Diameter	Dial Snap Gauge	XXXX	51.94	203
B	A	GearAssm,Idler	Diameter	Dial Bore Gauge	XXXX	51.97	199
B	B	Arm Assm,Valve Rkr	Surface Condition	Visual	XX XX	52.33	232
B	B	Arm Assm,Valve Rkr	Surface Condition	Visual	XX XX	52.33	233
B	B	Bushing,Sleeve	Diameter	Dial Snap Gauge	XXXX	53.09	249
A	B	Camshaft Assm,Left	Diameter	Micrometer	XXXX	53.16	45
A	B	Camshaft Assm,Rght	Diameter	Micrometer	XXXX	53.16	50
A	E	Sleeve,Cyl.Liner	Surface Condition	Visual	XX XX	53.39	42
A	F	Sleeve,Cyl.Liner	Surface Condition	Visual	XX XX	53.39	43
A	C	Piston Assm	Surface Condition	Visual	XX	53.47	33
A	D	Piston Assm	Surface Condition	Visual	XX	53.47	34
B	B	Guide,Poppet Valve	Surface Condition	Visual	XX XX	53.79	229

Table 5.5 (continued)

Commonality Analysis

05/13/83
Sorted by: 54.02

GARD, Inc.
Page No. 2

Apdx.	REF	Item	Characteristic	Method of Inspection	Gauging Approach VSELSD △	Derived Priority	Record Number
B	A	WasherThrust,C'Sft	Thickness	Dial Snap Gauge	XX	54.02	197
B	A	Armature,Starter	Diameter	Dial Snap Gauge	XXXX	54.24	254
B	C	Armature,Starter	Diameter	Dial Snap Gauge	XXXX	54.24	256
B	B	Hub,Idler Gear	Surface Condition	Visual	XX XX	54.49	204
A	*C	Crankshaft Assm.	Roundness	Micrometer	XX	55.15	18
B	A	Pin,Piston	Diameter	Dial Snap Gauge	XXXX	55.19	207
A	D	Rod Assm,Piston	Physical Condition	Visual	XX	55.25	29
A	*D	Crankshaft Assm.	Taper	Micrometer	XXXX	55.60	19
A	A	Piston Assm	Diameter	Micrometer	XXXX	56.06	31
A	A	Sleeve,Cyl.Liner	Diameter	Micrometer	XXXX	56.09	38
A	E	Piston Assm	Surface Condition	Visual & Feeler	XX XX	56.82	35
A	E	Crankshaft Assm.	Runout	Surf Plat&V-Block	XXXX	57.43	20
B	A	Follower Assm.	Diameter	Dial Snap Gauge	XXXX	57.53	218
A	A	Camshaft Assm,Left	Diameter	Micrometer	XXXX	58.28	44
A	A	Camshaft Assm,Rght	Diameter	Micrometer	XXXX	58.28	49
A	C	Camshaft Assm,Left	Runout	Vee Block,Surf Plt	XXXX	58.61	46
A	C	Camshaft Assm,Rght	Runout	Surf Plate&V-Block	XXXX	58.61	51
B	B	Exhaust Valve	Surface Condition	Visual	XX XX	58.79	224
B	C	Exhaust Valve	Surface Condition	Visual	XX XX	58.79	225
A	H	Crankshaft Assm.	Surface Condition	Visual	XX	61.09	23
A	*B	Crankshaft Assm.	Diameter	Micrometer	XXXX	61.31	17
B	E	Follower Assm.	Surface Condition	Visual	XX XX	61.58	222
B	A	Exhaust Valve	Diameter	Dial Snap Gauge	XXXX	62.08	223
A	*A	Crankshaft Assm.	Diameter	Micrometer	XXXX	63.24	16
A	D	Camshaft Assm,Left	Surface Condition	Visual	XX	63.85	47
A	D	Camshaft Assm,Rght	Surface Condition	Visual	XX	63.85	52
A	J	Crankshaft Assm.	Surface Condition	Visual	XX	64.33	24
						3990.82	

RECORDS SELECTED 79

Table 5.6 Surface

Commonality Analysis

05/13/83 GARD, Inc.

Sorted by: /DO Page No. 1

Apdx.	REF	Item	Characteristic	Method of Inspection	Gauging Approach VSELSO △	Derived Priority	Record Number
B	B	WasherThrust,Idler	Surface Condition	Visual	XX XX	30.30	206
B	B	Shaft,ShiftLever	Surface Condition	Visual	XX XX	31.11	274
B	C	Bushing,Bearing	Surface Condition	Visual	XX XX	31.11	277
B	B	Washer,Thrust	Surface Condition	Visual	XX XX	31.56	246
B	B	GearAssm,Idler	Surface Condition	Visual	XX XX	35.30	200
B	D	GearAssm,Idler	Surface Condition	Visual	XX XX	35.30	202
B	B	WasherThrust,C'Sft	Surface Condition	Visual	XX XX	41.32	198
B	B	Washer,Thrust,BlDr	Surface Condition	Visual	XX XX	42.18	287
B	A	Support,BlowerDr.	Surface Condition	Visual	XX XX	43.08	278
B	B	Hub,BlowerDrGear	Surface Condition	Visual	XX XX	43.98	282
B	B	ShaftAssm,RkrArm	Surface Condition	Visual	XX XX	44.09	237
B	B	Bearing Sleeve	Surface Condition	Visual	XX XX	46.79	209
B	C	Bushing,Sleeve	Surface Condition	Visual	XX XX	47.11	250
B	B	Frame Assm,ComEnd	Surface Condition	Visual	XX XX	47.11	252
B	C	Frame Assm,ComEnd	Surface Condition	Visual	XX XX	47.11	253
B	C	Arm Assm,Valve Rkr	Surface Condition	Visual	XX XX	47.33	234
B	C	Arm Assm,Valve Rkr	Surface Condition	Visual	XX XX	47.33	235
B	B	Washer,Thrust	Surface Condition	Visual	XX XX	47.54	217
B	C	GearAssm,FuelPump	GearTeethCondition	Visual	XX XX	48.04	243
B	B	GearAssm,FuelPump	Surface Condition	Visual	XX XX	48.34	242
B	B	GearHelical,C'Sft	Surface Condition	Visual	XX XX	49.00	212
B	B	GearHelical,C'Sft	Surface Condition	Visual	XX XX	49.00	213
B	B	Arm Assm.	Surface Condition	Visual	XX XX	49.99	239
B	C	Arm Assm.	Surface Condition	Visual	XX XX	49.99	240
B	B	Arm Assm,Valve Rkr	Surface Condition	Visual	XX XX	52.33	232
B	B	Arm Assm,Valve Rkr	Surface Condition	Visual	XX XX	52.33	233
A	F	Cylinder Head Assm	Surface Condition	Visual	X	53.19	59
A	E	Sleeve,Cyl.Liner	Surface Condition	Visual	XX XX	53.39	42
A	F	Sleeve,Cyl.Liner	Surface Condition	Visual	XX XX	53.39	43
A	C	Piston Assm	Surface Condition	Visual	XX	53.47	33
A	D	Piston Assm	Surface Condition	Visual	XX	53.47	34
B	B	Guide,Poppet Valve	Surface Condition	Visual	XX XX	53.79	229
B	B	Hub,Idler Gear	Surface Condition	Visual	XX XX	54.49	204
A	*F	Crankshaft Assm.	Surface Finish	Surface Analyzer	X	54.62	21
A	D	Rod Assm,Piston	Physical Condition	Visual	XX	55.25	29
A	E	Piston Assm	Surface Condition	Visual & Feeler	XX XX	56.82	35
B	B	Exhaust Valve	Surface Condition	Visual	XX XX	58.79	224
B	C	Exhaust Valve	Surface Condition	Visual	XX XX	58.79	225
A	H	Crankshaft Assm.	Surface Condition	Visual	XX	61.09	23
B	E	Follower Assm.	Surface Condition	Visual	XX XX	61.58	222
A	D	Camshaft Assm,Left	Surface Condition	Visual	XX	63.85	47
A	D	Camshaft Assm,Rght	Surface Condition	Visual	XX	63.85	52
A	J	Crankshaft Assm.	Surface Condition	Visual	XX	64.33	24
						2112.83	

RECORDS SELECTED 43

Table 5.7 Other

Commonality Analysis

05/13/83 GARD, Inc.

Sorted by: 50.72 Page No. 1

Apdx.	REF	Item	Characteristic	Method of Inspection	Gauging Approach VSELSO △	Derived Priority	Record Number
A	A	Cylinder Head Assm	Leakage	Pressure Test	X	50.72	54
B	I	Armature,Starter	Shorts&Grounds	Electrical	X	64.54	262
A	A	Block Assm.	Leakage	Pressure Test	X	71.01	1
						186.27	

RECORDS SELECTED 3

Table 5.8

Normalized & Weighted Implementation Prioritization Table

06/21/83 GARD, Inc.

Sorted by: 38.83 Page No. 1

Weighting Factor (.09) (.15)(.14)(.14)(.15)(.33)

Appx.	REF	Item	Characteristic	Method of Inspection	Cplx/ Skill	Error Prob.	Perf. Time	Test Volume	Fab. Crit.	Perf. Crit.	DERIVED PRIORITY(X100)
B	B	Armature,Starter	Diameter	Dial Snap Gauge	.054	.0	.0079	.0063	.1	.22	38.83
B	D	Armature,Starter	Diameter	Snap Gauge	.054	.0	.0079	.0063	.1	.22	38.83
B	E	Armature,Starter	Depth	Depth Gauge	.054	.0	.0167	.0063	.1	.22	39.72
A	B	Block Assm.	Flatness	Strtedge&Feeler	.072	.0152	.0063	.0076	.1	.22	42.13
A	C	Block Assm.	Flatness	Strtedge&Feeler	.072	.0152	.0063	.0076	.1	.22	42.13
B	A	LeverAssm,Starter	Diameter	Plug Gauge	.045	.0	.0079	.0035	.05	.33	43.65
A	M	Block Assm.	Flatness of C'Bore	Depth Bore Gauge	.081	.0152	.0087	.0229	.1	.22	44.79
B	A	Hub,BlowerDrGear	Diameter	Dial Bore Gauge	.063	.0	.0079	.0041	.05	.33	45.51
B	A	Washer,StarterArm.	Thickness	Snap Gauge	.045	.0	.0079	.0035	.1	.33	48.65
A	G	Block Assm.	Taper of Bore	Dial Bore Gauge	.09	.0050	.0056	.0687	.1	.22	48.95
B	A	Shaft,ShiftLever	Diameter	Dial Snap Gauge	.054	.0	.0079	.0035	.1	.33	49.55
B	B	Bushing,Bearing	Diameter	Dial Snap Gauge	.054	.0	.0079	.0035	.1	.33	49.55
B	A	Washer,Thrust,BlDr	Thickness	Dial Snap Gauge	.054	.0	.0079	.0041	.1	.33	49.61
B	A	Washer,StarterPin.	Thickness	Snap Gauge	.054	.0	.0079	.0042	.1	.33	49.62
B	A	Drive,StarterPin.	Diameter	Dial Bore Gauge	.054	.0	.0092	.0035	.1	.33	49.68
B	A	Bushing,Bearing	Diameter	Dial Bore Gauge	.054	.0	.0095	.0035	.1	.33	49.71
B	A	WasherThrust,Idler	Thickness	Dial Snap Gauge	.054	.0	.0095	.0044	.1	.33	49.80
B	A	Hub,Fuel Pump	Diameter	Dial Snap Gauge	.054	.0	.0159	.0038	.1	.33	50.37
B	A	Washer,Thrust	Thickness	Snap Gauge	.054	.0	.0159	.0038	.1	.33	50.37
B	A	Frame Assm,ComEnd	Diameter	Dial Bore Gauge	.054	.0	.0175	.0035	.1	.33	50.50
B	A	GearAssm,FuelPump	Diameter	Dial Bore Gauge	.054	.0	.0173	.0038	.1	.33	50.52
B	A	Gear,Timing,C'Shft	Diameter	Dial Bore Gauge	.054	.0	.0172	.0042	.1	.33	50.55
A	3-80b	Assembly of Engine	Backlash	Dial Indicator	.054	.0	.0190	.0038	.1	.33	50.70
A	C	Cylinder Head Assm	Flatness	Strghtedge&Feeler	.072	.0049	.0063	.0466	.05	.33	51.00
A	B	Cylinder Head Assm	Flatness	Strghtedge&Feeler	.072	.0074	.0063	.0466	.05	.33	51.25
A	G	Crankshaft Assm.	Diameter	Micrometer	.081	.0	.0031	.0004	.1	.33	51.46
B	B	Gear,Helix,BlDr	Diameter	Dial Snap Gauge	.072	.0	.0094	.0041	.1	.33	51.56
B	F	Armature,Starter	Runout	Surf Plate&V-Block	.063	.0	.0224	.0063	.1	.33	52.18
B	A	ShaftAssm,RkrArm	Diameter	Dial Snap Gauge	.054	.0	.0159	.0233	.1	.33	52.32
B	A	Arm Assm.	Diameter	Dial Bore Gauge	.054	.0	.0161	.0233	.1	.33	52.35
A	3-75d	Assembly of Engine	End Play	Dial Indicator	.072	.0	.0190	.0038	.1	.33	52.50
B	A	Hub,Idler Gear	Diameter	Dial Snap Gauge	.081	.0	.0159	.0044	.1	.33	53.13
B	A	GearAssm,Idler	Diameter	Dial Bore Gauge	.081	.0	.0171	.0044	.1	.33	53.26
A	G	Cylinder Head Assm	Thickness	Micrometer	.081	.0599	.0063	.0077	.05	.33	53.51
B	B	Bushing,Sleeve	Diameter	Dial Snap Gauge	.045	.0	.0092	.0035	.15	.33	53.78
B	A	Housing,Starter	Diameter	Dial Bore Gauge	.045	.0	.0095	.0035	.15	.33	53.81
B	A	WasherThrust,C'Sft	Thickness	Dial Snap Gauge	.054	.0	.0063	.0045	.15	.33	54.50
B	A	Armature,Starter	Diameter	Dial Snap Gauge	.054	.0	.0079	.0063	.15	.33	54.83
B	C	Armature,Starter	Diameter	Dial Snap Gauge	.054	.0	.0079	.0063	.15	.33	54.83
B	A	Washer,Thrust	Thickness	Dial Snap Gauge	.054	.0	.0079	.0077	.15	.33	54.97
A	*F	Crankshaft Assm.	Surface Finish	Surface Analyzer	.081	.0077	.0047	.0262	.1	.33	54.98
B	A	Bearing Sleeve	Diameter	Dial Bore Gauge	.081	.0	.0161	.0233	.1	.33	55.05
B	C	Follower Assm.	DiametricClearance	Feeler Gauge	.045	.0	.0063	.07	.1	.33	55.14
B	D	Follower Assm.	Clearance, Side	Feeler Gauge	.054	.0416	.0063	.07	.05	.33	55.20
A	*C	Crankshaft Assm.	Roundness	Micrometer	.09	.0044	.0031	.0262	.1	.33	55.39
B	A	Bushing,Sleeve	Diameter	Dial Bore Gauge	.054	.0	.0172	.0035	.15	.33	55.48
B	A	Arm Assm,Valve Rkr	Diameter	Dial Bore Gauge	.063	.0	.0160	.0466	.1	.33	55.57
B	A	Arm Assm,Valve Rkr	Diameter	Dial Bore Gauge	.063	.0	.0160	.0466	.1	.33	55.57
B	A	Pin,Piston	Diameter	Dial Snap Gauge	.072	.0228	.0063	.0254	.1	.33	55.67
A	*D	Crankshaft Assm.	Taper	Micrometer	.09	.0088	.0031	.0262	.1	.33	55.83
A	Q	Block Assm.	Diameter	Dial Bore Gauge	.081	.0152	.0065	.0305	.1	.33	56.33
A	A	Rod Assm,Piston	Diameter	Dial Bore Gauge	.081	.0249	.0042	.0233	.1	.33	56.36

Table 5.9

Normalized & Weighted Implementation Prioritization Table

06/21/83
Sorted by: 56.36

GARD, Inc.
Page No. 2

Apdx.	REF	Item	Characteristic	Method of Inspection	Cplx/ Skill	Error Prob.	Perf. Time	Test Volume	Fab. Crit.	Perf. Crit.	DERIVED PRIORITY(X100)
A	B	Rod Assm,Piston	Diameter	Dial Bore Gauge	.081	.0249	.0042	.0233	.1	.33	56.36
A	A	Piston Assm	Diameter	Micrometer	.081	.0228	.0050	.0254	.1	.33	56.44
B	A	GearHelical,C'Sft	Diameter	Dial Bore Gauge	.063	.0	.0171	.0044	.15	.33	56.46
B	A	GearHelical,C'Sft	Diameter	Dial Bore Gauge	.063	.0	.0171	.0044	.15	.33	56.46
A	A	Sleeve,Cyl.Liner	Diameter	Micrometer	.081	.0228	.0063	.0254	.1	.33	56.57
A	B	Sleeve,Cyl.Liner	Diameter	Dial Bore Gauge	.081	.0228	.0064	.0254	.1	.33	56.58
A	3-76b	Assembly of Engine	Depth	Depth Gauge	.081	.0249	.0074	.0233	.1	.33	56.67
A	B	Camshaft Assm,Left	Diameter	Micrometer	.081	.0	.0509	.0077	.1	.33	56.97
A	B	Camshaft Assm,Rght	Diameter	Micrometer	.081	.0	.0509	.0077	.1	.33	56.97
B	B	Follower Assm.	Diameter	Dial Snap Gauge	.063	.0	.0159	.07	.1	.33	57.89
A	E	Piston Assm	Surface Condition	Visual & Feeler	.063	.0457	.0159	.0254	.1	.33	58.02
A	K	Crankshaft Assm.	Radius	Radius Gauge	.09	.0044	.0033	.0525	.1	.33	58.04
A	C	Rod Assm,Piston	Length	Surface Plate	.09	.0249	.0140	.0233	.1	.33	58.24
A	E	Crankshaft Assm.	Runout	Surf Plat&V-Block	.09	.0	.0137	.0008	.15	.33	58.46
B	A	Follower Assm.	Diameter	Dial Snap Gauge	.063	.0083	.0159	.07	.1	.33	58.72
A	L	Block Assm.	Diameter	Dial Bore Gauge	.072	.0152	.0065	.0152	.15	.33	58.91
A	D	Sleeve,Cyl.Liner	Taper	Dial Bore Gauge	.081	.0457	.0096	.0254	.1	.33	59.19
A	J	Block Assm.	Diameter	Dial Bore Gauge	.081	.0076	.0082	.0152	.15	.33	59.22
A	A	Camshaft Assm,Left	Diameter	Micrometer	.081	.0374	.0127	.0311	.1	.33	59.23
A	A	Camshaft Assm,Rght	Diameter	Micrometer	.081	.0374	.0127	.0311	.1	.33	59.23
A	K	Block Assm.	Diameter	Dial Bore Gauge	.072	.0228	.0065	.0152	.15	.33	59.67
A	E	Block Assm.	Diameter	Dial Bore Gauge	.081	.0101	.0060	.0229	.15	.33	60.01
A	F	Block Assm.	Diameter	Dial Bore Gauge	.081	.0101	.0060	.0229	.15	.33	60.01
A	N	Block Assm.	Depth of C'Bore	Depth Gauge	.063	.0254	.0087	.0229	.15	.33	60.01
A	B	Piston Assm	Diameter	Dial Bore Gauge	.081	.0343	.0053	.0509	.1	.33	60.16
A	D	Block Assm.	Diameter	Dial Bore Gauge	.081	.0152	.0060	.0229	.15	.33	60.52
A	E	Rod Assm,Piston	Straightness	Surface Plate	.09	.0499	.0140	.0233	.1	.33	60.74
A	P	Block Assm.	Diameter of C'Bore	Dial Bore Gauge	.081	.0152	.0087	.0229	.15	.33	60.79
A	C	Camshaft Assm,Left	Runout	Vee Block,Surf Plt	.081	.0	.0378	.0155	.15	.33	61.44
A	C	Camshaft Assm,Rght	Runout	Surf Plate&V-Block	.081	.0	.0378	.0155	.15	.33	61.44
A	C	Sleeve,Cyl.Liner	Roundness	Dial Bore Gauge	.081	.0686	.0096	.0254	.1	.33	61.48
A	*B	Crankshaft Assm.	Diameter	Micrometer	.09	.0310	.0031	.0112	.15	.33	61.55
B	D	Exhaust Valve	Thickness	Scale	.081	.0	.0159	.0933	.1	.33	62.03
B	A	Exhaust Valve	Diameter	Dial Snap Gauge	.081	.0124	.0159	.0933	.1	.33	63.27
B	A	Guide,Poppet Valve	Diameter	Dial Bore Gauge	.081	.0124	.0159	.0933	.1	.33	63.28
A	3-74b	Assembly of Engine	Fit	Micrometer & DBG	.09	.0468	.0050	.0622	.1	.33	63.41
A	*A	Crankshaft Assm.	Diameter	Micrometer	.09	.0465	.0031	.0150	.15	.33	63.48
B	B	Support,BlowerDr.	Diameter	Dial Bore Gauge	.045	.1396	.0172	.0041	.1	.33	63.61
A	H	Block Assm.	Roundness of Bore	Dial Bore Gauge	.081	.0050	.0056	.0687	.15	.33	64.05
A	E	Cylinder Head Assm	Diameter of CamFol	Plug Gauge	.081	.0066	.0064	.07	.15	.33	64.41
A	3-91c1	Assembly of Engine	Backlash	Dial Indicator	.054	.1498	.0190	.0038	.1	.33	65.68
A	D	Cylinder Head Assm	Diameter of C'Bore	Dial Bore Gauge	.081	.0037	.0064	.0933	.15	.33	66.45
A	3-91c4	Assembly of Engine	Concentricity	Dividing Head	.063	.1498	.0254	.0038	.1	.33	67.22

5240.87

RECORDS SELECTED 95

VIDEO

Table 5.10

Commonality Analysis

06/24/83
Sorted by:XX

GARD.Inc.
Page No. 1

Apdx.	REF	Item	Characteristic	Method of Inspection	Gauging Approach VSELSC Δ	Derived Priority	Record Number
A	K	Crankshaft Assm.	Radius	Radius Gauge	XX	58.04	25
A	D	Block Assm.	Diameter	Dial Bore Gauge	XXX	60.52	4
A	K	Block Assm.	Diameter	Dial Bore Gauge	XXX	59.67	10
A	P	Block Assm.	Diameter of C'Bore	Dial Bore Gauge	XXX	60.79	14
A	C	Rod Assm.Piston	Length	Surface Plate	XXX	58.24	28
A	3-91c4	Assembly of Engine	Concentricity	Dividing Head	XXX	67.22	183
B	B	Follower Assm.	Diameter	Dial Snap Gauge	XXX	57.89	219
B	D	Exhaust Valve	Thickness	Scale	XXX	62.03	226
B	A	LeverAssm,Starter	Diameter	Plug Gauge	XXX	43.65	270
A	*A	Crankshaft Assm.	Diameter	Micrometer	XXXX	63.48	16
A	*B	Crankshaft Assm.	Diameter	Micrometer	XXXX	61.55	17
A	*C	Crankshaft Assm.	Roundness	Micrometer	XXXX	55.39	18
A	*D	Crankshaft Assm.	Taper	Micrometer	XXXX	55.83	19
A	E	Crankshaft Assm.	Runout	Surf Plat&V-Block	XXXX	58.46	20
A	G	Crankshaft Assm.	Diameter	Micrometer	XXXX	51.46	22
A	A	Rod Assm,Piston	Diameter	Dial Bore Gauge	XXXX	56.36	26
A	A	Piston Assm	Diameter	Micrometer	XXXX	56.44	31
A	A	Sleeve,Cyl.Liner	Diameter	Micrometer	XXXX	56.57	38
A	A	Camshaft Assm.Left	Diameter	Micrometer	XXXX	59.23	44
A	B	Camshaft Assm.Left	Diameter	Micrometer	XXXX	56.97	45
A	C	Camshaft Assm.Left	Runout	Vee Block,Surf Plt	XXXX	61.44	46
A	A	Camshaft Assm,Rght	Diameter	Micrometer	XXXX	59.23	49
A	B	Camshaft Assm,Rght	Diameter	Micrometer	XXXX	56.97	50
A	C	Camshaft Assm,Rght	Runout	Surf Plate&V-Block	XXXX	61.44	51
A	G	Cylinder Head Assm	Thickness	Micrometer	XXXX	53.51	60
B	A	WasherThrust,C'Sft	Thickness	Dial Snap Gauge	XXXX	54.50	197
B	A	Hub,Idler Gear	Diameter	Dial Snap Gauge	XXXX	53.13	203
B	A	WasherThrust,Idler	Thickness	Dial Snap Gauge	XXXX	49.80	205
B	A	Pin,Piston	Diameter	Dial Snap Gauge	XXXX	55.67	207
B	A	Washer,Thrust	Thickness	Dial Snap Gauge	XXXX	54.97	216
B	A	Follower Assm.	Diameter	Dial Snap Gauge	XXXX	58.72	218
B	A	Exhaust Valve	Diameter	Dial Snap Gauge	XXXX	63.27	223
B	A	ShaftAssm.RkrArm	Diameter	Dial Snap Gauge	XXXX	52.32	236
B	A	GearAssm,FuelPump	Diameter	Dial Bore Gauge	XXXX	50.52	241
B	A	Hub,Fuel Pump	Diameter	Dial Snap Gauge	XXXX	50.37	244
B	A	Washer,Thrust	Thickness	Snap Gauge	XXXX	50.37	245
B	B	Bushing,Sleeve	Diameter	Dial Snap Gauge	XXXX	53.78	249
B	A	Armature,Starter	Diameter	Dial Snap Gauge	XXXX	54.83	254
B	B	Armature,Starter	Diameter	Dial Snap Gauge	XXXX	38.83	255
B	C	Armature,Starter	Diameter	Dial Snap Gauge	XXXX	54.83	256
B	D	Armature,Starter	Diameter	Snap Gauge	XXXX	38.83	257
B	F	Armature,Starter	Runout	Surf Plate&V-Block	XXXX	52.18	259
B	A	Washer,StarterArm.	Thickness	Dial Snap Gauge	XXXX	48.65	263
B	A	Washer,StarterPin.	Thickness	Snap Gauge	XXXX	49.62	268
B	A	Shaft,ShiftLever	Diameter	Dial Snap Gauge	XXXX	49.55	273
B	B	Bushing,Bearing	Diameter	Dial Snap Gauge	XXXX	49.55	276
B	A	Hub,BlowerDrGear	Diameter	Dial Bore Gauge	XXXX	45.51	281
B	A	Washer,Thrust,BlDr	Thickness	Dial Snap Gauge	XXXX	49.61	286

VIDEO

Table 5.10 (continued)

Commonality Analysis

06/24/83
Sorted by:

GARD, Inc.
Page No. 2

Apdx.	REF	Item	Characteristic	Method of Inspection	Gauging Approach VSELSO Δ	Derived Priority	Record Number
						2631.79	

RECORDS SELECTED 48

Table 5.11

VIDEO - STAGE

Commonality Analysis

06/24/83
Sorted by:XX

GHRD, Inc.
Page No. 1

Addk.	REF	Item	Characteristic	Method of Inspection	Gauging Approach VSELSO Δ	Derived Priority	Record Number
A	K	Crankshaft Assm.	Radius	Radius Gauge	XX	58.04	25
A	D	Block Assm.	Diameter	Dial Bore Gauge	XXX	60.52	4
A	K	Block Assm.	Diameter	Dial Bore Gauge	XXX	59.67	10
A	P	Block Assm.	Diameter of C'Bore	Dial Bore Gauge	XXX	60.79	14
A	C	Rod Assm,Piston	Length	Surface Plate	XXX	58.24	28
A	3-91c4	Assembly of Engine	Concentricity	Dividing Head	XXX	67.22	183
B	B	Follower Assm.	Diameter	Dial Snap Gauge	XXX	57.89	219
B	D	Exhaust Valve	Thickness	Scale	XXX	62.03	226
B	A	LeverAssm.Starter	Diameter	Plug Gauge	XXX	43.65	270
A	*A	Crankshaft Assm.	Diameter	Micrometer	XXXX	63.48	16
A	*B	Crankshaft Assm.	Diameter	Micrometer	XXXX	61.55	17
A	*C	Crankshaft Assm.	Roundness	Micrometer	XXXX	55.39	18
A	*D	Crankshaft Assm.	Taper	Micrometer	XXXX	55.83	19
A	E	Crankshaft Assm.	Runout	Surf Plat&V-Block	XXXX	58.46	20
A	G	Crankshaft Assm.	Diameter	Micrometer	XXXX	51.46	22
A	A	Rod Assm,Piston	Diameter	Dial Bore Gauge	XXXX	56.36	26
A	A	Piston Assm	Diameter	Micrometer	XXXX	56.44	31
A	A	Sleeve,Cyl.Liner	Diameter	Micrometer	XXXX	56.57	38
A	A	Camshaft Assm,Left	Diameter	Micrometer	XXXX	59.23	44
A	B	Camshaft Assm,Left	Diameter	Micrometer	XXXX	56.97	45
A	C	Camshaft Assm,Left	Runout	Vee Block,Surf Plt	XXXX	61.44	46
A	A	Camshaft Assm,Rght	Diameter	Micrometer	XXXX	59.23	49
A	B	Camshaft Assm,Rght	Diameter	Micrometer	XXXX	56.97	50
A	C	Camshaft Assm,Rght	Runout	Surf Plate&V-Block	XXXX	61.44	51
A	G	Cylinder Head Assm	Thickness	Micrometer	XXXX	53.51	60
B	A	WasherThrust,C'Sft	Thickness	Dial Snap Gauge	XXXX	54.50	197
B	A	Hub,Idler Gear	Diameter	Dial Snap Gauge	XXXX	53.13	203
B	A	WasherThrust,Idler	Thickness	Dial Snap Gauge	XXXX	49.80	205
B	A	Pin,Piston	Diameter	Dial Snap Gauge	XXXX	55.67	207
B	A	Washer,Thrust	Thickness	Dial Snap Gauge	XXXX	54.37	216
B	A	Follower Assm.	Diameter	Dial Snap Gauge	XXXX	58.72	218
B	A	Exhaust Valve	Diameter	Dial Snap Gauge	XXXX	63.27	223
B	A	ShaftAssm,RkrArm	Diameter	Dial Snap Gauge	XXXX	52.32	236
B	A	GearAssm,FuelPump	Diameter	Dial Bore Gauge	XXXX	50.52	241
B	A	Hub,Fuel Pump	Diameter	Dial Snap Gauge	XXXX	50.37	244
B	A	Washer,Thrust	Thickness	Snap Gauge	XXXX	50.37	245
B	B	Bushing,Sleeve	Diameter	Dial Snap Gauge	XXXX	53.78	249
B	A	Armature,Starter	Diameter	Dial Snap Gauge	XXXX	54.83	254
B	B	Armature,Starter	Diameter	Dial Snap Gauge	XXXX	38.83	255
B	C	Armature,Starter	Diameter	Dial Snap Gauge	XXXX	54.83	256
B	D	Armature,Starter	Diameter	Snap Gauge	XXXX	38.83	257
B	F	Armature,Starter	Runout	Surf Plate&V-Block	XXXX	52.18	259
B	A	Washer,StarterArm.	Thickness	Dial Snap Gauge	XXXX	48.65	263
B	A	Washer,StarterPin.	Thickness	Snap Gauge	XXXX	49.62	268
B	A	Shaft,ShiftLever	Diameter	Dial Snap Gauge	XXXX	49.55	273
B	B	Bushing,Bearing	Diameter	Dial Snap Gauge	XXXX	49.55	276
B	A	Hub,BlowerDrGear	Diameter	Dial Bore Gauge	XXXX	45.51	281
B	A	Washer,Thrust,BlDr	Thickness	Dial Snap Gauge	XXXX	49.61	286

VIDEO - STAGE

Table 5.11 (continued)
Commonality Analysis

06/24/83
Sorted by:

GARD, Inc.
Page No. 2

Apdx.	REF	Item	Characteristic	Method of Inspection	Gauging Approach VSELSO △	Derived Priority	Record Number
						2631.79	

RECORDS SELECTED 48

ELECTRONIC

Table 5.12

Commonality Analysis

06/24/83
Sorted by: X

64RD,Inc.
Page No.

Appl.	REF	Item	Characteristic	Method of Inspection	Gauging Approach VSELSD Δ	Derived Priority	Record Number
A	B	Block Assm.	Flatness	Strtedge&Feeler	X	42.13	2
A	C	Block Assm.	Flatness	Strtedge&Feeler	X	42.13	3
A	E	Block Assm.	Diameter	Dial Bore Gauge	X	60.01	5
A	F	Block Assm.	Diameter	Dial Bore Gauge	X	60.01	6
A	G	Block Assm.	Taper of Bore	Dial Bore Gauge	X	48.95	7
A	H	Block Assm.	Roundness of Bore	Dial Bore Gauge	X	64.05	8
A	J	Block Assm.	Diameter	Dial Bore Gauge	X	59.22	9
A	L	Block Assm.	Diameter	Dial Bore Gauge	X	58.91	11
A	M	Block Assm.	Flatness of C'Bore	Depth Bore Gauge	X	44.79	12
A	N	Block Assm.	Depth of C'Bore	Depth Gauge	X	60.01	13
A	Q	Block Assm.	Diameter	Dial Bore Gauge	X	56.33	15
A	E	Rod Assm.Piston	Straightness	Surface Plate	X	60.74	30
A	B	Piston Assm	Diameter	Dial Bore Gauge	X	60.16	32
A	B	Sleeve.Cyl.Liner	Diameter	Dial Bore Gauge	X	56.58	39
A	C	Sleeve,Cyl.Liner	Roundness	Dial Bore Gauge	X	61.48	40
A	D	Sleeve,Cyl.Liner	Taper	Dial Bore Gauge	X	59.19	41
A	B	Cylinder Head Assm	Flatness	Strghtedge&Feeler	X	51.25	55
A	C	Cylinder Head Assm	Flatness	Strghtedge&Feeler	X	51.00	56
A	D	Cylinder Head Assm	Diameter of C'Bore	Dial Bore Gauge	X	66.45	57
A	E	Cylinder Head Assm	Diameter of CamFol	Plug Gauge	X	64.41	58
A	3-91c1	Assembly of Engine	Backlash	Dial Indicator	X	65.68	182
A	3-74b	Assembly of Engine	Fit	Micrometer & DBG	X	63.41	185
A	3-75d1	Assembly of Engine	End Play	Dial Indicator	X	52.50	186
A	3-76b	Assembly of Engine	Depth	Depth Gauge	X	56.67	187
A	3-80b	Assembly of Engine	Backlash	Dial Indicator	X	50.70	189
A	3-80c4	Assembly of Engine	Depth	Dial Indicator	X	67.22	190
A	3-91c1	Assembly of Engine	Backlash	Dial Indicator	X	65.68	191
B	A	Gear,Timing,C'Shft	Diameter	Dial Bore Gauge	X	50.55	195
B	A	GearAssm.Idler	Diameter	Dial Bore Gauge	X	53.26	199
B	C	Follower Assm.	DiametricClearance	Feeler Gauge	X	55.14	220
B	D	Follower Assm.	Clearance, Side	Feeler Gauge	X	55.20	221
B	A	Guide,Poppet Valve	Diameter	Dial Bore Gauge	X	63.28	228
B	A	Bushing,Sleeve	Diameter	Dial Bore Gauge	X	55.48	248
B	E	Armature,Starter	Depth	Depth Gauge	X	39.72	258
B	A	Drive,StarterPin.	Diameter	Dial Bore Gauge	X	49.68	265
B	A	Bushing,Bearing	Diameter	Dial Bore Gauge	X	49.71	275
B	B	Support,BlowerDr.	Diameter	Dial Bore Gauge	X	63.61	280
A	B	Rod Assm,Piston	Diameter	Dial Bore Gauge	XX	56.36	27
B	A	Bearing Sleeve	Diameter	Dial Bore Gauge	XX	55.05	208
B	A	GearHelical,C'Sft	Diameter	Dial Bore Gauge	XX	56.46	210
B	A	GearHelical,C'Sft	Diameter	Dial Bore Gauge	XX	56.46	211
B	A	Arm Assm,Valve Rkr	Diameter	Dial Bore Gauge	XX	55.57	230
B	A	Arm Assm,Valve Rkr	Diameter	Dial Bore Gauge	XX	55.57	231
B	A	Arm Assm.	Diameter	Dial Bore Gauge	XX	52.35	238
B	A	Housing,Starter	Diameter	Dial Bore Gauge	XX	53.81	247
B	A	Frame Assm.ComEnd	Diameter	Dial Bore Gauge	XX	50.50	251
B	B	Gear,Helix,BlDr	Diameter	Dial Snap Gauge	XX	51.56	285
A	D	Block Assm.	Diameter	Dial Bore Gauge	XXX	60.52	4
A	K	Block Assm.	Diameter	Dial Bore Gauge	XXX	59.67	10
A	P	Block Assm.	Diameter of C'Bore	Dial Bore Gauge	XXX	60.79	14
A	C	Rod Assm,Piston	Length	Surface Plate	XXX	58.24	26
A	3-91c4	Assembly of Engine	Concentricity	Dividing Head	XXX	67.22	183

Table 5.12 (continued)

Commonality Analysis

ELECTRONIC

06/24/83
Sorted by:XXX

GARD, Inc.
Page No. 2

Apdx.	REF	Item	Characteristic	Method of Inspection	Gauging Approach VSELSO △	Derived Priority	Record Number
B	B	Follower Assm.	Diameter	Dial Snap Gauge	XXX	57.89	219
B	D	Exhaust Valve	Thickness	Scale	XXX	62.03	226
B	A	LeverAssm.Starter	Diameter	Plug Gauge	XXX	43.65	270
A	*A	Crankshaft Assm.	Diameter	Micrometer	XXXX	63.48	16
A	*B	Crankshaft Assm.	Diameter	Micrometer	XXXX	61.55	17
A	*C	Crankshaft Assm.	Roundness	Micrometer	XXXX	55.39	18
A	*D	Crankshaft Assm.	Taper	Micrometer	XXXX	55.83	19
A	E	Crankshaft Assm.	Runout	Surf Plat&V-Block	XXXX	58.46	20
A	G	Crankshaft Assm.	Diameter	Micrometer	XXXX	51.46	22
A	A	Rod Assm,Piston	Diameter	Dial Bore Gauge	XXXX	56.36	26
A	A	Piston Assm	Diameter	Micrometer	XXXX	56.44	31
A	A	Sleeve,Cyl.Liner	Diameter	Micrometer	XXXX	56.57	38
A	A	Camshaft Assm,Left	Diameter	Micrometer	XXXX	59.23	44
A	B	Camshaft Assm,Left	Diameter	Micrometer	XXXX	56.97	45
A	C	Camshaft Assm,Left	Runout	Vee Block,Surf Plt	XXXX	61.44	46
A	A	Camshaft Assm,Rght	Diameter	Micrometer	XXXX	59.23	49
A	B	Camshaft Assm,Rght	Diameter	Micrometer	XXXX	56.97	50
A	C	Camshaft Assm,Rght	Runout	Surf Plate&V-Block	XXXX	61.44	51
A	G	Cylinder Head Assm	Thickness	Micrometer	XXXX	53.51	60
B	A	WasherThrust,C'Sft	Thickness	Dial Snap Gauge	XXXX	54.50	197
B	A	Hub,Idler Gear	Diameter	Dial Snap Gauge	XXXX	53.13	203
B	A	WasherThrust,Idler	Thickness	Dial Snap Gauge	XXXX	49.80	205
B	A	Pin,Piston	Diameter	Dial Snap Gauge	XXXX	55.67	207
B	A	Washer,Thrust	Thickness	Dial Snap Gauge	XXXX	54.97	216
B	A	Follower Assm.	Diameter	Dial Snap Gauge	XXXX	58.72	218
B	A	Exhaust Valve	Diameter	Dial Snap Gauge	XXXX	63.27	223
B	A	ShaftAssm,RkrArm	Diameter	Dial Snap Gauge	XXXX	52.32	236
B	A	GearAssm,FuelPump	Diameter	Dial Bore Gauge	XXXX	50.52	241
B	A	Hub.Fuel Pump	Diameter	Dial Snap Gauge	XXXX	50.37	244
B	A	Washer,Thrust	Thickness	Snap Gauge	XXXX	50.37	245
B	B	Bushing,Sleeve	Diameter	Dial Snap Gauge	XXXX	53.78	249
B	A	Armature,Starter	Diameter	Dial Snap Gauge	XXXX	54.83	254
B	B	Armature,Starter	Diameter	Dial Snap Gauge	XXXX	38.83	255
B	C	Armature,Starter	Diameter	Dial Snap Gauge	XXXX	54.83	256
B	D	Armature,Starter	Diameter	Snap Gauge	XXXX	38.83	257
B	F	Armature,Starter	Runout	Surf Plate&V-Block	XXXX	52.18	259
B	A	Washer,StarterArm.	Thickness	Dial Snap Gauge	XXXX	48.65	263
B	A	Washer,StarterPin.	Thickness	Snap Gauge	XXXX	49.62	268
B	A	Shaft,ShiftLever	Diameter	Dial Snap Gauge	XXXX	49.55	273
B	B	Bushing,Bearing	Diameter	Dial Snap Gauge	XXXX	49.55	276
B	A	Hub,BlowerDrGear	Diameter	Dial Bore Gauge	XXXX	45.51	281
B	A	Washer,Thrust,BlDr	Thickness	Dial Snap Gauge	XXXX	49.61	286
						5202.73	

RECORDS SELECTED 94

Table 5.13

Commonality Analysis

LASER

06/24/83
Sorted by: XX

GARD, Inc.
Page No. 1

Apdx.	REF	Item	Characteristic	Method of Inspection	Gauging Approach VSELSO △	Derived Priority	Record Number
A	B	Rod Assm.Piston	Diameter	Dial Bore Gauge	XX	56.36	27
B	A	Bearing Sleeve	Diameter	Dial Bore Gauge	XX	55.05	208
B	A	GearHelical,C'Sft	Diameter	Dial Bore Gauge	XX	56.46	210
B	A	GearHelical,C'Sft	Diameter	Dial Bore Gauge	XX	56.46	211
B	A	Arm Assm.Valve Rkr	Diameter	Dial Bore Gauge	XX	55.57	230
B	A	Arm Assm.Valve Rkr	Diameter	Dial Bore Gauge	XX	55.57	231
B	A	Arm Assm.	Diameter	Dial Bore Gauge	XX	52.35	238
B	A	Housing,Starter	Diameter	Dial Bore Gauge	XX	53.81	247
B	A	Frame Assm,ComEnd	Diameter	Dial Bore Gauge	XX	50.50	251
B	B	Gear,Helix.BlDr	Diameter	Dial Snap Gauge	XX	51.56	285
A	*A	Crankshaft Assm.	Diameter	Micrometer	XXXX	63.48	16
A	*B	Crankshaft Assm.	Diameter	Micrometer	XXXX	61.55	17
A	*C	Crankshaft Assm.	Roundness	Micrometer	XXXX	55.39	18
A	*D	Crankshaft Assm.	Taper	Micrometer	XXXX	55.83	19
A	E	Crankshaft Assm.	Runout	Surf Plat&V-Block	XXXX	58.46	20
A	S	Crankshaft Assm.	Diameter	Micrometer	XXXX	51.46	22
A	A	Rod Assm.Piston	Diameter	Dial Bore Gauge	XXXX	56.36	26
A	A	Piston Assm	Diameter	Micrometer	XXXX	56.44	31
A	A	Sleeve,Cyl.Liner	Diameter	Micrometer	XXXX	56.57	38
A	A	Camshaft Assm.Left	Diameter	Micrometer	XXXX	59.23	44
A	B	Camshaft Assm.Left	Diameter	Micrometer	XXXX	56.97	45
A	C	Camshaft Assm.Left	Runout	Vee Block.Surf Plt	XXXX	61.44	46
A	A	Camshaft Assm.Rght	Diameter	Micrometer	XXXX	59.23	49
A	B	Camshaft Assm,Rght	Diameter	Micrometer	XXXX	56.97	50
A	C	Camshaft Assm,Rght	Runout	Surf Plate&V-Block	XXXX	61.44	51
A	G	Cylinder Head Assm	Thickness	Micrometer	XXXX	53.51	60
B	A	WasherThrust.C'Sft	Thickness	Dial Snap Gauge	XXXX	54.50	197
B	A	Hub,Idler Gear	Diameter	Dial Snap Gauge	XXXX	53.13	203
B	A	WasherThrust.Idler	Thickness	Dial Snap Gauge	XXXX	49.80	205
B	A	Pin,Piston	Diameter	Dial Snap Gauge	XXXX	55.67	207
B	A	Washer,Thrust	Thickness	Dial Snap Gauge	XXXX	54.97	216
B	A	Follower Assm.	Diameter	Dial Snap Gauge	XXXX	59.72	218
B	A	Exhaust Valve	Diameter	Dial Snap Gauge	XXXX	63.27	223
B	A	ShaftAssm,RkrArm	Diameter	Dial Snap Gauge	XXXX	52.32	236
B	A	GearAssm,FuelPump	Diameter	Dial Bore Gauge	XXXX	50.52	241
B	A	Hub,Fuel Pump	Diameter	Dial Snap Gauge	XXXX	50.37	244
B	A	Washer,Thrust	Thickness	Snap Gauge	XXXX	50.37	245
B	B	Bushing,Sleeve	Diameter	Dial Snap Gauge	XXXX	53.78	249
B	A	Armature,Starter	Diameter	Dial Snap Gauge	XXXX	54.83	254
B	B	Armature,Starter	Diameter	Dial Snap Gauge	XXXX	38.83	255
B	C	Armature,Starter	Diameter	Dial Snap Gauge	XXXX	54.83	256
B	D	Armature,Starter	Diameter	Snap Gauge	XXXX	38.83	257
B	F	Armature,Starter	Runout	Surf Plate&V-Block	XXXX	52.18	259
B	A	Washer.StarterArm.	Thickness	Dial Snap Gauge	XXXX	48.65	263
B	A	Washer.StarterPin.	Thickness	Snap Gauge	XXXX	49.62	268
B	A	Shaft,ShiftLever	Diameter	Dial Snap Gauge	XXXX	49.55	273
B	B	Bushing.Bearing	Diameter	Dial Snap Gauge	XXXX	49.55	276
B	A	Hub,BlowerDrGear	Diameter	Dial Bore Gauge	XXXX	45.51	281
B	A	Washer.Thrust.BlDr	Thickness	Dial Snap Gauge	XXXX	49.61	286

Table 5.13 (continued)

Commonality Analysis

LASER

06/24/83
Sorted by:

GARD, Inc.
Page No. 2

Apdx.	REF	Item	Characteristic	Method of Inspection	Gauging Approach VSELSO	Derived Priority	Record Number
						2647.43	

RECORDS SELECTED 49

Table 5.14

Commonality Analysis

SURFACE

06/24/83
Sorted by: X

GARD, Inc.
Page No. 1

Apdx.	REF	Item	Characteristic	Method of Inspection	Gauging Approach VSELSO	Derived Priority	Record Number
A	*F	Crankshaft Assm.	Surface Finish	Surface Analyzer	X	54.98	21
						54.98	

RECORDS SELECTED 1

Using the new Relative Total Priority values, a technique ranking analysis was performed for the measurement techniques (Figure 5.2). An explanation of the column headings is provided in Figure 5.3. The ranking analysis indicates that the electronic measurement technique is the leading candidate on which to base the dimensional gauging system for the 6V53 engine.

To complete the gauging system analysis it was necessary to consider several other factors:

a) What happens if we add a second measurement technique to "backup" the electronic technique?

b) Can a non-electronic technique combination do better than the electronic technique by itself?

c) Can any of the measurements made by the electronic technique be better performed by one of the other techniques?

Backup Technique

It was desirable to determine the effect of adding a second gauging technique to the primary (Electronic) gauging technique. the first step in such an analysis is to determine the increase in percent of total priority coverage due to the additional technique. The results:

Added Coverage/Backup Technique

Backup Technique	Increase In Percent Of Total Priority
Video or Video Stage	+1 percent
Surface	+1 percent
Laser	+0 percent

VARIABLE FACTORS / GAUGING TECHNIQUES	RELATIVE MEASUREMENT TIME	RELATIVE MOBILITY	% TOTAL PRIORITY	ENVIRONMENTAL COMPATIBILITY	ADAPTABILITY	EASE OF USE	PROBABILITY OF SUCCESS	RELATIVE SYSTEM COST	WEIGHTED TOTALS	RELATIVE RANKING
WEIGHTING FACTORS	.154	.077	.154	.077	.077	.077	.231	.154		
VIDEO	.50	.5	.50	.9	.5	.9	.8	.7	.66	3
ELECTRONIC	1.0	1.0	.98	.8	1.0	1.0	.9	1.0	.96	1
VIDEO-STAGE	.25	.3	.50	.8	.5	.9	.8	.5	.57	5
LASER	.25	.6	.50	1.0	.25	.8	.9	.8	.65	4
CURRENT PRACTICE	.125	.15	1.0	1.0	1.0	.1	1.0	1.0	.80	2
	1 = MINIMUM	1 = MINIMUM	1 = 100%	1 = MOST	1 = MOST	1 = MOST	1 = HIGHEST	1 = LOWEST		

Figure 5.2 Gauging Technique Ranking By Matrix Analysis

Measurement Time - The time needed to perform the required measurement. Since each gauging technique is, in effect, instantaneous, this time is dependent upon mechanical handling of the gauging sensors (camera, laser, or electronic gauge)/parts. Comparing typical high precision mechanical movements, such as would be required by video/video-stage, and laser techniques, with typical robot movements, which would be used with electronic gauging, the speed of movement ratio is in favor of robotic movements.

Mobility - The mobility of the entire system (configured to perform the maximum number of possible measurements) based upon a combination of physical weight of the system and size of the system components.

Percent Total Priority - The percent of the total priority of the applicable measurements on the 6V53 engine which can be performed by the particular gauging technique.

Environmental Compatibility - How readily the components, of which the particular system is comprised, can be made compatible with the required operating environment.

Adaptability - How readily a particular system can be adjusted (or modified) to perform new measurements or to perform required measurements on new parts.

Ease of Use - How easily a system could be used by typical inspection personnel. This includes system operation, measurement interpretation, and set-up.

Probability of Success - The best evaluation of the system's probability of accomplishing its intended function. This is based upon current commercial practice, new product awareness, conversation with suppliers, and engineering estimates.

System Cost - The cost of reproducing the entire system, after initial development, for a particular gauging technique.

Figure 5.3 Explanation of Variable Factors Used For Gauging Technique Analysis

As shown, the addition of a second gauging technique to the electronic technique would provide little gain in percent of total priority covered. In retrospect, this could be expected since the electronic approach does almost all the weighted measurement priorities by itself (98 percent).

Non-Electronic Combination

Of interest was whether the other available combinations (ones not using the electronic technique: video or video-stage and laser) would be more beneficial in percent of total priority covered. The result of such an analysis shows that this combination covers 60 percent of the total priority (at more than 50 percent additional costs, relative to the electronic approach). Thus, other gauging technique combinations would not provide the amount of coverage that electronic gauging can provide by itself. It is therefore not practical to consider their use.

Alternate Techniques

A final question to be answered is: can any of the measurements performed by Electronic techniques, be better done by video or laser techniques? "Better", in this case,is defined as higher speed or lower cost.

More accuracy or resolution do not contribute to "better" since they add nothing as long as electronic techniques have met this requirement. Both video and laser techniques have inherently higher measurement speed implementability than electronic techniques. However for this specific application such high measurement speed is not an advantage in and of itself. Further, such a speed advantage cannot be practically used due to multi-part fixturing constraints. As to lower costs, both video and laser techniques inherantly use more sophisticated sensing/processing

than electronic techniques and thereby will be more costly to implement. Therefore, it was concluded that in this application there would be no cases where video or laser-based system can perform a particular measurement better than a electronic-based system.

In retrospect, the automatic gauging system for the the 6V53 engine must make high resolution, low volume, static measurements on large rugged parts; this is what electronic gauging technology has been designed to perform. Video and laser gauging techniques are mainly designed for high resolution, high volume, dynamic measurements on small/delicate parts. Thus, while in some cases of this application, video or laser gauging can provide measurement results similar to electronic gauging, it is not unreasonable to find that there are no apparent cases where they provide "better" results.

Our analysis leads to the conclusion that the automatic depot level gauging system to be developed should exclusively employ electronic gauging (using robotic handling per our system concept). The Preliminary System Design Definition based upon this approach was developed and is described in the next section. The Final System Design Definition for the prototype system is described in Section 8.

6.0 PRELIMINARY SYSTEM DESIGN DEFINITION

A preliminary design of the Mobile Automatic Gauging System (MAGS) was developed using robotic handling of a precision electronic gauging device as evolved in Section 5, the final design will be presented in Section 8. The System is shown in Figure 6.1, with a block diagram of the System in Figure 6.2. The robot arm is mounted in an overhead position to provide maximum flexibility of motion and is shown gripping an electronic gauging device which generates dimensional data for interpretation by the system computer.

All of the electronics are housed in the heavy duty cabinet. On the opposite side of the control panel is the small parts mounting surface which consists of a matrix of tapped holes and threaded shafts providing a universal mounting arrangement for smaller parts. Large parts, such as the block, are placed on the inclined plane in the center of the cart. All parts are held in position by gravity, thereby precluding the need for clamping-type fixtures.

Major System Modules

System Computer: Controls the overall operation of the gauging system.

Major functions include:

1) Implementation of operating system program
2) Command of robot computer
3) Command of gauge interface
4) Interpretation of gauge data
5) Correction of gauge data
6) Control of disk/tape storage system
7) Control of CRT monitor
8) Control of printer

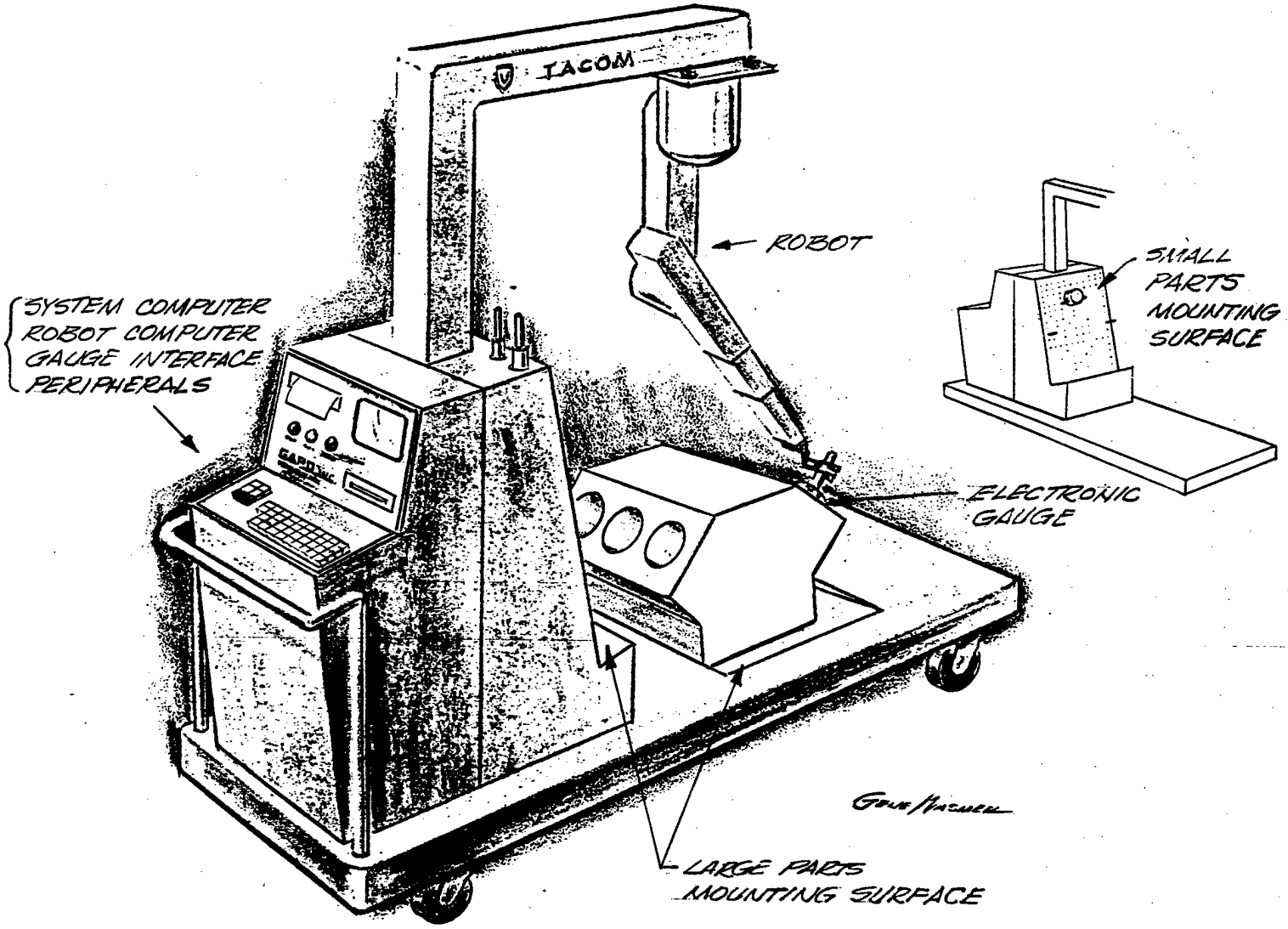

Figure 6.1 CONCEPTUAL MOBILE AUTOMATIC GAUGING SYSTEM (MAG)

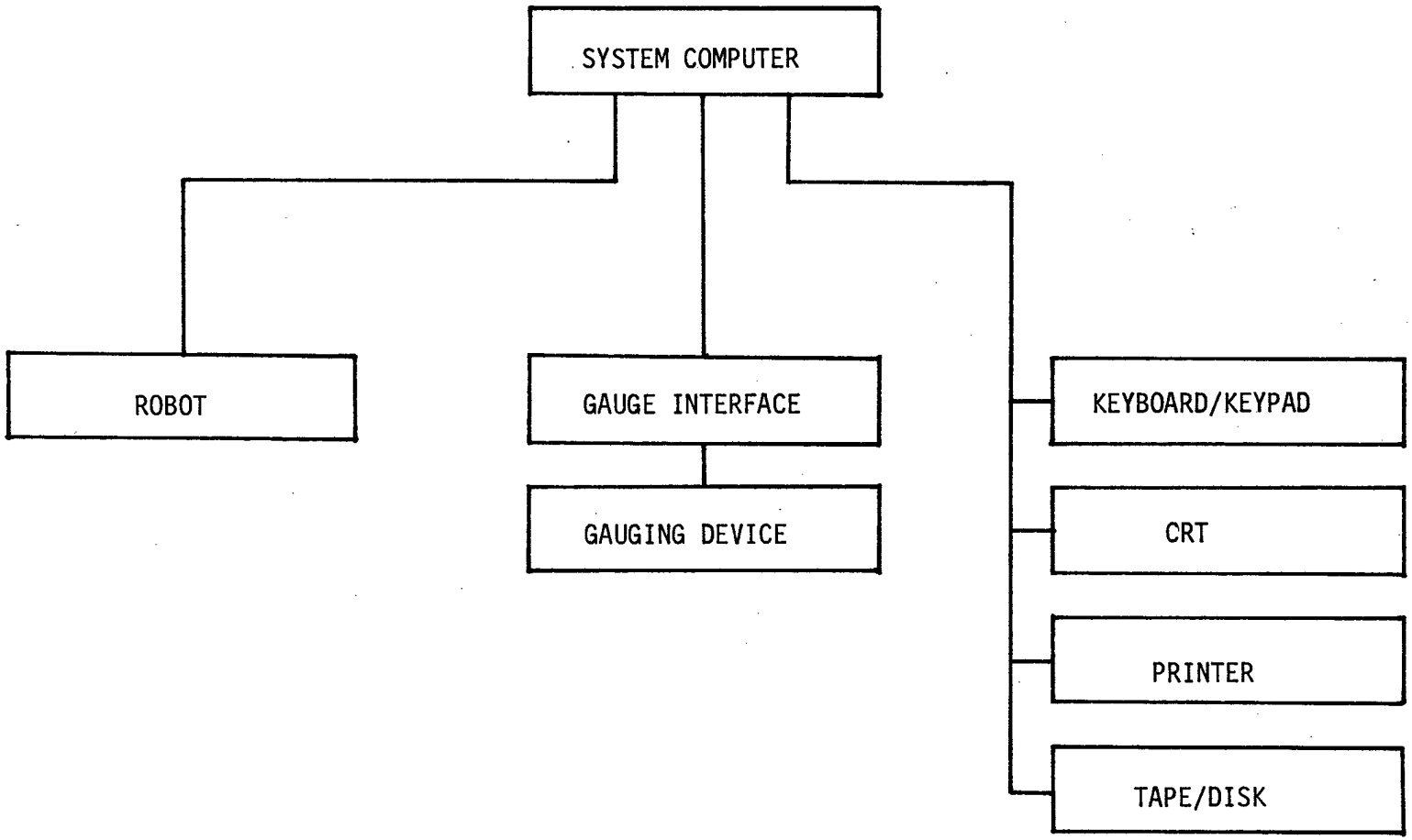

Figure 6.2 Automatic Gauging System Block Diagram

Robot - Is used as a reprogrammable manipulator which moves the gauging device through a variable programmed motion for the performance of a dimensional measurement task.

Gauge Interface - Receives the primary electrical signal from the gauging device and converts it into a form suitable for use by the System Computer.

Gauging Device - Converts the physical dimension of the measurement into an electrical signal. The device is physically mounted on the wrist of the robot arm and is electrically connected to the gauge interface. The conceptual device contains six electronic non-contact sensing elements mounted on two posts (Figure 6.3), one of which is movable, the other stationary. This design replaces the large number of discrete gauging devices (∿30-40) which would be needed to gauge all applicable measurements in Contract Appendices A & B. This device contains electronic sensors which are capable of .00005" resolution, and is motorized for automatic operation. The preliminary conceptual design shows a maximum measurement length of approximately 6". This covers all of the expected applicable measurements in Appendix A, except for the length of the Piston Connecting Rod (8.8 in.). The types of measurement which can be performed include: outside diameter, inside diameter, depth, thickness, taper, flatness, runout, and concentricity.

To perform outside diameter measurements, the inside pair of electronic sensors are used. For inside diameter measurements, the outside pair of electronic sensors are used. Depth and thickness measurements will be made by using the bottom sensors on the gauging device in a differential mode (i.e., measuring the distance between two surfaces). Roundness and taper are calculated from a series of diameter measurements. Flatness will be

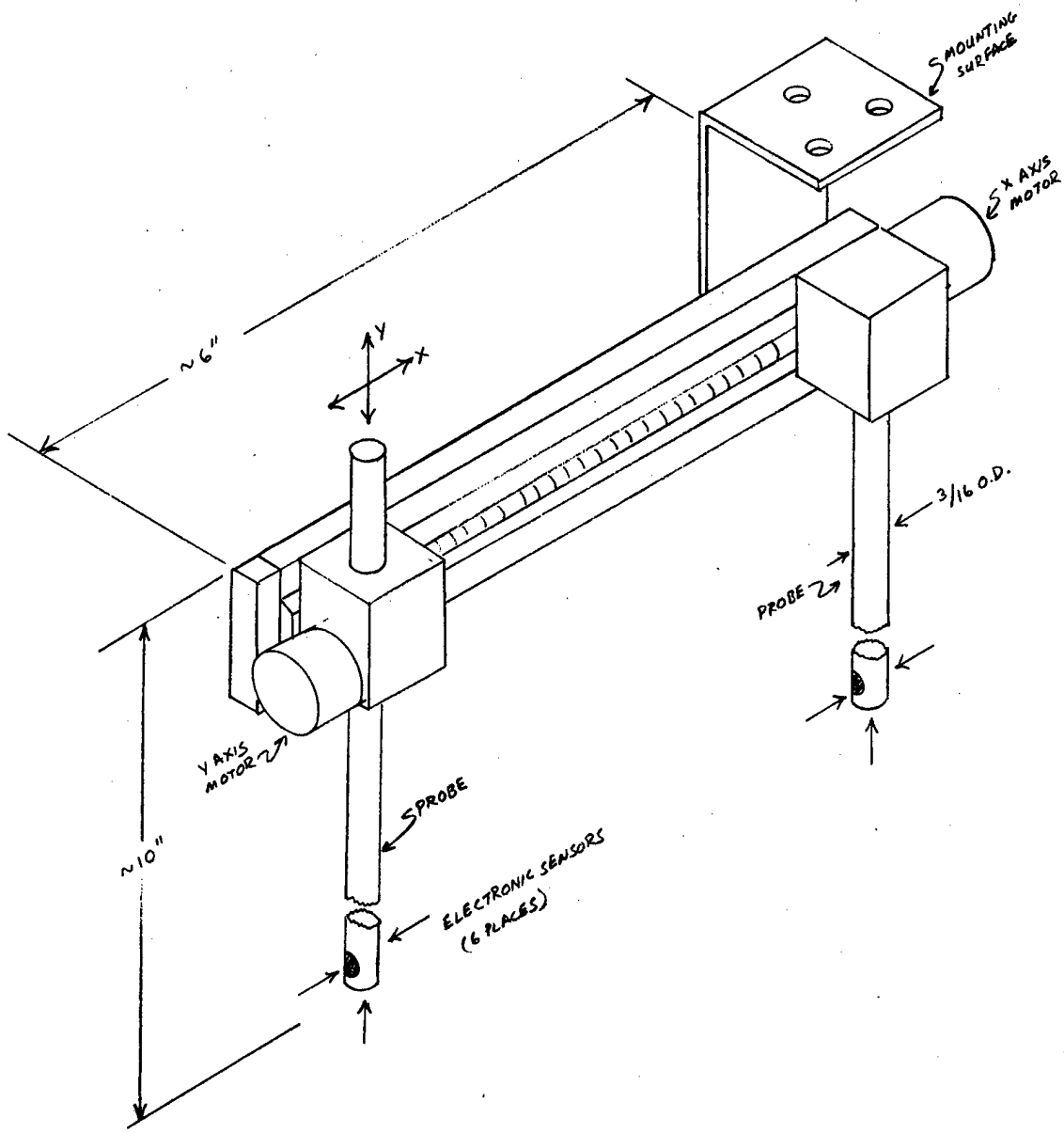

Figure 6.3 Conceptual Electronic Gauging Device

measured by the device if the surface gauged is referenced to a second surface (i.e., flatness of the counterbore, more properly called parallelism). Non-referenced flatness measurements (such as the top surface of the block) will use a differential technique using a reference bar placed on the top surface. Runout could be obtained by using one sensor, which monitors a surface in motion; however, this would require a motorized fixture, which is not included in this system definition.

Concentricity could be measured, but since this measurement is not included in Appendix A, and since it would be an added expense to implement (due to a special gauge) it is not included in this system definition.

Peripheral Modules:

Keyboard - Mainly used by engineering personnel for reprogramming of the system. Normally not used by operating personnel; probably hidden in final system configuration.

Keypad: Primarily used by operating personnel for selecting system functions.

CRT - Used to display set-up/dimensional values and operators' "menu".

Printer - Provides a hard-copy of data.

Disk/Tape - Used as a mass storage device. It contains the system program's, inspection procedures, and measurement data.

Functional Description

System Operation (Operating Personnel Level)

The operator will first set-up the system (if it has been moved) by locking it in place through the use of self-contained, spring-loaded

pedestals on the cart. Next, the operator will connect power to the system and energize it, at which time the system computer performs an auto-start. After a short warm-up period, the system is ready to operate. The typical sequence of operations during use of the system follows:

1. The operator loads the part to be gauged on the large or small part mounting surface.
2. The operator picks the part name from a menu shown by the system computer on the CRT, and enters the corresponding part name line number via a keypad.
3. The system computer loads the necessary gauging procedure into its memory and the robot computer memory.
4. The operator pushes the 'start' button.
5. The system computer sends the start command to the robot computer.
6. The robot system "sets" the gauging device, calibrates it, and places it in/on the item to be measured.
7. The gauge interface sends the dimensional information to the system computer.
8. The system computer performs any necessary corrections and stores the adjusted dimensional data.
9. Steps 6-8 are repeated until all applicable measurements have been performed on the item.
10. When the inspection is complete, the operator is informed of the accept/reject decision. If desired, the actual dimensions can be shown on the CRT and/or printer. If the next item is the same as the previous one, the gauging sequence can be repeated by pushing a "repeat" button.

System Operation (Engineering Personnel Level)

The proposed system will be programmable to allow engineering personnel to add new part inspection procedures and modify pre-programmed accept/reject criteria (assuming the new part will fit on either mounting surface and that the proper gauging device is available). The programming would be in two steps, first the motions of the robot are programmed, then the dimensional accept/reject criteria and part information are entered.

The robot is controlled by the robot computer, which is programmed to command the robot arm to automatically repeat a specified series of movements. The robot is taught a new procedure by leading it through the operating sequence by means of a hand-held control box (teach pendant): the robot is led through each step, and the motion is recorded in memory at the end of each movement.

Next, the new part information (such as part number, name, tolerances, etc.) will be entered into the system via a computer keyboard. The system computer will then use this information, along with the robot's movement program, to create a file for the new part. The file will then be saved on a mass storage device, such as floppy disk or tape. In the future, when the part is inspected, the system computer will call this file and have all the necessary information to perform the inspection.

If only the accept/reject criteria need to be modified, it will be a simple matter to edit the file with the system computer.

Calibration

In order to insure consistent and accurate dimensional measurements, the proposed system will use an "in-process" calibration technique. Each

time the gauging device is reset to a new dimension, it will be placed on the proper calibration standard before performing the measurement on the actual part. This allows the system computer to 'zero' the gauging device and to correct for any variations in the output signal.

The calibration standards will consist of 1) a series of rings stacked in a pyramid for O.D. calibration, 2) a similar series of rings for I.D. calibration and 3) a step block for depth calibration. Changes in ambient temperature will effect both the standards and the measured item equally, therefore, a natural dimensional compensation occurs for environmental temperature variation.

System Performance Parameters

1. Inspection System Mobility

Requirement: One operator shall be able to move the system throughout the production facility and set up the equipment for inspection operation within 30 minutes.

Discussion: This requirement addresses: (1) the physical movement of the system and (2) the time required to set up the system for operation.

(1) The proposed system is mounted on a wheeled cart, similar to the type of cart already in use at Red River Army Depot. The maximum weight of the system (unloaded) would be approximately equal to the standard RRAD cart with two engine blocks (less than 1000 lb). Therefore, the system would be as easy to move as the carts are in current practice.

(2) Once the system is moved into position, the operator would then lock the cart in place (~ 1 min), connect power to the system (~ 2 min), energize the system (~ 1 min), and allow for stabilization (~ 10 min). In total, about 15 minutes or less should be required to ready the system for operation.

2. Speed of Measurement

Requirements: The automated measurement shall reduce the inspection time by a minimum of 50% of the current inspection time.

Discussion: There are three elements which contribute to the inspection time: (1) set-up (part/gauge), (2) movement of the gauge device, and (3) reading of the gauge device.

(1) The set-up time of the proposed system to perform a particular type of measurement will be kept to a minimum because special fixtures and clamping devices are not needed. The parts to be measured are held in place by gravity rather than by mechanical force. As the parts are placed on the system they are automatically positioned due to the design of the inspection areas. Therefore, no extra time is needed to position the parts in the system.

(2) Movement of the gauging devices will be performed by the robot and end effector. The robot arm can consistently move at speeds of about 50 to 100 inches/second, thereby providing enough speed to contribute to reduction of the current inspection time.

(3) Current reading of the gauge device consists of the operator visually interpreting the dimensional readout of the device. The proposed system would, in effect, instantaneously read the device, since the output is an electronic signal.

3. Accuracy

Requirement: Accuracies contained in the Contract's Appendices A & B must be met.

Discussion: The majority of the measurements in Appendices A & B are specified to a resolution of .0001 inch, a few to .001 inch. In order to insure accurate dimensional measurements at the required resolution, the gauging device used for this system will read to the nearest .00005 inch, which is consistent with American Design Standards.

4. Measurement Programmability

Requirement: Assuming that the existing automatic gauging system can be used to inspect a new required measurement, the system shall be programmable by engineering personnel to allow addition or changes to inspection software accept/reject criteria.

Discussion: The proposed system's software will be designed to allow modification of the accept/reject criteria. At this time it is intended that both the gauging procedure software and the accept/reject criteria will be recorded on floppy disk or tape cartridge and engineering personnel will have access to the files via the System Computer.

5. Operational Environment

Requirement: The proposed system shall be capable of operating in a manufacturing environment such as that encountered at RRAD, where large variances in ambient temperature, 50°F to 110°F, humidity and air dust content occur.

Discussion: All components selected for the proposed system will be of industrial quality. The robot is designed for use in harsh environments; the gauging device will be designed for ruggedness. All electronic components will be mounted inside a heavy duty sealed enclosure.

TACOM concurred with the concept design definition with the following comments:

a. Approximately 6" dimension, Figure 6.3, should be approximately 10" to accommodate future dimensioning requirements.

b. Temperature compensation (alternate methods should be considered).

c. Memory storage (PROM or hard disk storage should be considered).

The above (and other changes) are addressed in the Final System Design Definition (Section 8).

7.0 KEY ELEMENTS

Key elements (critical subsystems) of the Mobil Automatic Gauging System (MAGS), as described in the approved Preliminary Design Definition, have been identified as the gauging device, dimensional reference standard, robot, and the main computer. This section discusses these key elements.

7.1 Electronic Gauge

To determine state-of-the-art in electronic gauging devices, a review was made of current technical literature and suppliers' catalogs. After this review, selected suppliers were contacted. From the information received, it was found convenient to separate electronic gauging techniques into two categories: contact and non-contact. The contact techniques operate by the interaction of a mechanical device which touches the object being measured with a electronic (or sometimes optical) transducer which converts the mechanical displacement into an electrical signal proportional to the amount of displacement. Normally, a unique measuring device is needed for each measurement size. All of the precision non-contact devices reviewed work by converting the physical displacement of the transducer (probe) from the surface of the test object into a useable electronic signal.

Both of the above-mentioned techniques can perform the dimensional measurements to the required accuracies. It was decided to concentrate on the non-contact approach because of the large number (30-40) of contact measuring devices which would be required to do all the applicable measurements on the 6V53 engine and its components. The

non-contact probe has the advantage of being mountable in a "universal" fixture which could be used for a variety of different measurement sizes and types.

GARD found three major suppliers of non-contact gauging probes: ADE Corporation, Mechanical Technology, Inc., and HiTEC Corporation. From the technical literature available and extensive phone conversations, the system manufactured by HiTEC was judged to have the best technical approach for our application. A trip was made by the COTR and the GARD Project Engineer to HiTEC Corporation for a demonstration of their electronic gauging equipment. The results of the demonstration showed a high probability that their system could perform to the requirements of this project.

Principal of Operation

The HiTEC electronic sensors are non-contacting, linear, rugged devices which accurately measure displacement of the sensor from a conductive surface. The probe consists of a sensor (center capacitor) surrounded by a cylindrical guard ring (Figure 7.1). A thin layer of insulation separates the sensor from the guard. The guard ring is also insulated from ground. The sensor is wired to the center electrode of a coaxial cable assembly and the guard ring is connected to the shield. The shield must be insulated because it is driven at the same voltage as the sensor. The principle of operation is to measure capacitive reactance, Xc, between the sensor and ground. Unlike capacitance, C, which is a non-linear function of displacement, capacitive reactance is a linear function.

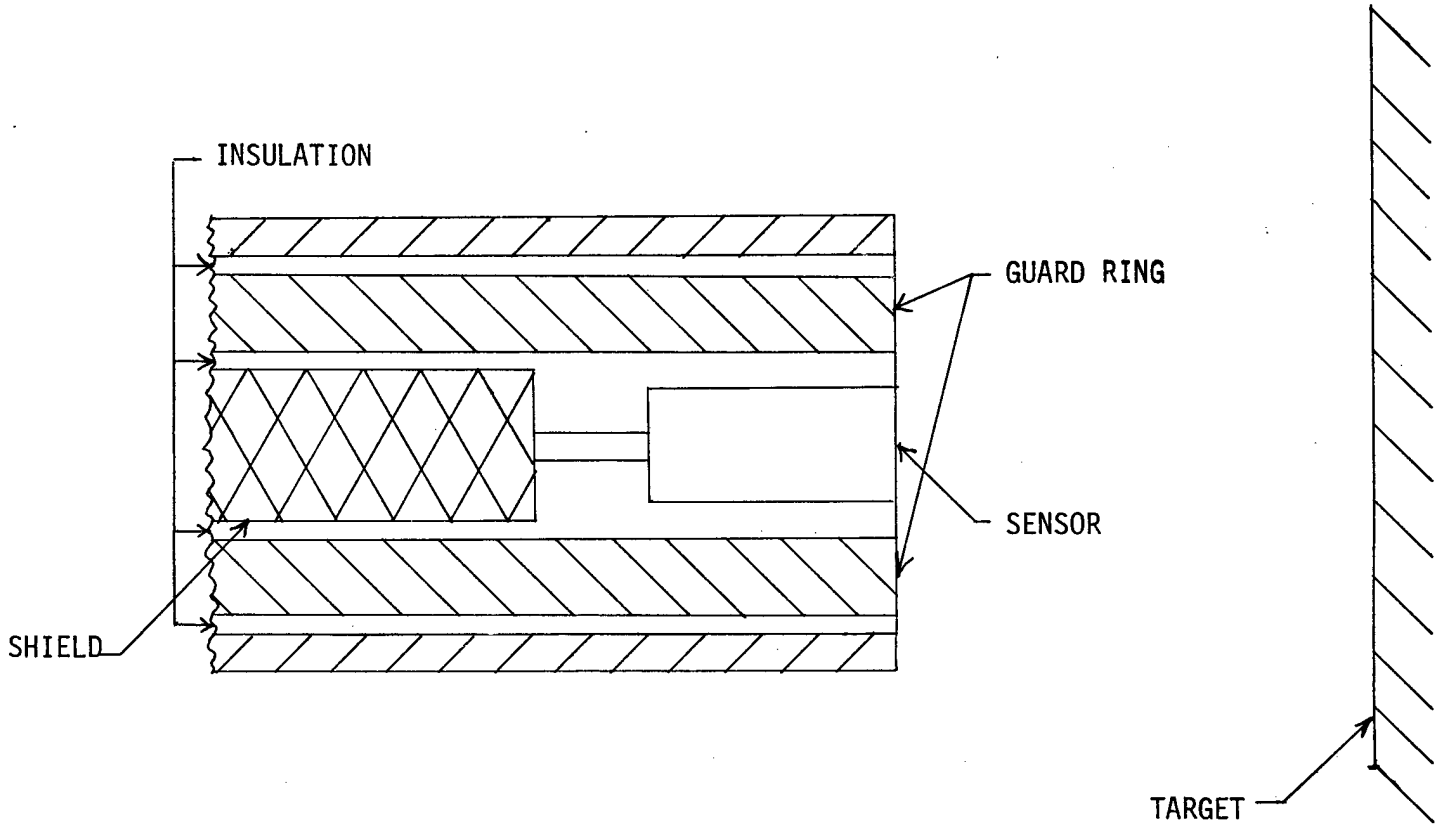

Figure 7.1 CROSS SECTIONAL VIEW OF A TYPICAL HiTEC NON-CONTACT SENSOR

From basic physics,

$$(1) \quad X_c = \frac{1}{2\pi f C}$$

also

$$(2) \quad C = \frac{EA}{4\pi D}$$

C = capacitance

f = frequency

E = dielectric constant

A = area of capacitor

D = Distance between plates (displacement)

K = a constant

Substituting C in equation (1) yields

$$X_c = \frac{1}{2\pi f \frac{EA}{4\pi D}} .$$

Since f, E, A and π are held constant,

$$X_c = KD.$$

Hence capacitive reactance is a linear function of the distance between sensor and ground.

For this relationship to hold, frequency must be constant. The instrumentation employs a crystal oscillator, similar to that used in precision time pieces, for this purpose.

As the distance between the sensor and ground increases, fringing effects increase and can cause non-linearity. To prevent this, a guard ring, driven at the same potential as the sensor, provides a uniform electrostatic field between sensor and ground. The guard ring extends the linear range of the probe.

The instrument amplifier produces an analog voltage proportional to the distance between the sensor and an electrically conductive surface connected to ground. The capacitive reactance between sensor and ground is measured with the use of an A.C. constant current source and a low capacitance voltage pre-amplifier that measures the voltage drop between the sensor and ground. The voltage between sensor and ground is proportional to the capacitive reactance, which in turn is proportional to the distance between sensor and the measuring surface. Synchronous detection is employed to rectify the measured A.C. voltage, which is filtered to produce an average DC voltage proportional to displacement.

Range vs. Sensitivity Trade Off

Some applications require maximum probe range while others require maximum sensitivity. The instrumentation has built into it gain control to adjust sensitivity and range suitable for most any given application. But there is a trade-off: to obtain maximum sensitivity, range must be sacrificed. In any event, the selected instrument can be within .02% accuracy and have infinite resolution over any selected range.

Dual Probe Measurements

Because of the linearity, the probes can be used in pairs with outputs added or subtracted within the instrument. A dual channel instrument uses one oscillator for both channels to minimize cross talk from closely spaced sensors.

To receive a meaningful response from HiTEC on their ability to fabricate a probe configuration designed for this application, it was necessary to develop a specification defining our needs. The specification (Appendix B) was sent to HiTEC. Their positive response to it allowed GARD to pursue preliminary experimental evaluation of the HiTEC gauging approach within the Phase I scope of work. The successful results of the evaluation are described in Section 7.5.

7.2 Reference Standard

The MAG System concept requires a dimensional reference standard to assure the accuracy of the measurements performed. In operation, the MAG System makes a non-contact reading on 6V53 engine/components and translates the reading into a dimensional measurement by use of a precision reference standard. The reference standard could simply be a series of precision gauge blocks, but it is more desirable (and practical) to have a variable "universal" reference standard which does not require a large number of precision blocks be supplied with the System.

To evaluate the practicality of such a variable universal reference standard, a version consisting of a precision motor-controlled single-axis motorized slide mechanism and a high-resolution optical readout scale (with associated electronic readout) was concepted. The "heart" of this reference standard would be a "Heidenhain" linear scale. This scale has 20 millionths of an inch (0.000020 in.) accuracy, which is five times more than required System accuracy. In operation, the HiTEC electronic probes (preset after gauging the part of interest) are positioned relative to a moveable "target" on the reference standard. The position of this target is monitored by the

Heidenhain scale. A drive motor slowly moves the target while the system computer monitors the electronic signals from both the Heidenhain scale and the electronic probes. When probe target position readout matches the stored probe part dimension readout, the Heidenhain output provides accurate part dimensioning.

Evaluation criteria for the described concept included environmental compatibility, setting speed, accuracy of readout, weight, and required maintenance. A discussion of the criteria relative to this concept follows.

Environmental Compatibility

All components must be compatible with the Depot environment. A manufacturer of such a slide mechanism (Velmax) stated that there is no practical low temperature limit, but the high temperature limit is approximately 100°C (212°F). The slide mechanism can be covered by a bellows-type waycover to protect the ways and slider gibs. The permissible ambient temperature range of the Heidenhain scale is 32 degrees to 140 degrees F, and the mechanism is protected from dust and dirt by an aluminum housing and rubber seal. Both items (slide mechanism and scale) meet the requirements of environmental compatibility.

Setting Speed

During a dimension transfer operation, it is desirable to have a large dynamic speed range: high speed for coarse positioning and low speed for fine positioning. A motor controller and lead screw will allow movement speeds from .25-125 in/min (a 500:1 range). This range is more than adequate.

Weight

It is desirable to keep the weight of the reference standard at a minimum. The combined weight of such a slide mechanism and scale is approximately 6 pounds. This weight is much less than the total weight of a set of discrete reference standards.

Required Maintenance

Required maintenance must be kept at a minimum. The only required maintenance of the reference standard system is a yearly check to make sure the ways of the slide mechanism are lubricated.

This concept for a highly accurate practical reference looked promising. It was within the scope of work on this Phase of the project to perform some preliminary experimentation with key elements of this concept in conjunction with some of the HiTEC equipment. Successful results are described in Section 7.5.

7.3 Robot

To help determine the potential applicability of each of the many robots which are currently available, the first step was to produce a list of performance requirements by which to judge each robot.

Performance Requirements

- Payload - The robot must be capable of handling a payload (motorized gauging device) weighing approximately 5 lbs.
- Accuracy - The repeatable positioning accuracy within the inspection volume shall be ±.004 inches or better.
- Environment - The robot shall be capable of operating on a typical "shop floor", where airborne dust and fumes can occur.
- Temperature - The robot shall be capable of operating over the range of 50°F - 115°F.
- Weight - The total robot package (arm and electronics) shall be less than 300 lbs.

- Inspection Volume - The robot shall be capable of reaching any point in the inspection volume.
- Movements - The robot shall be configured with the necessary movements to allow the gauging device (approximately 15-17 in. long) to perpendicularly approach any given plane within the inspection volume.
- Robot Control - The robot's computer shall be controllable by a external host computer. The robot's computer shall also be capable of uploading and downloading programs with the host computer acting as the mass storage device.
- Robot Mounting - The robot shall be capable of operation in an overhead position.
- Programming - The robot shall be programmable via a handheld "teach pendant".
- Miscellaneous - It is desirable (but not necessary) that the robot be powered from a standard electrical supply (110/220V AC).

Commercially available robots were reviewed with the above criteria. The most likely candidate found was a robot and controller from United States Robots (a Square D Company) called the "Maker 100". The COTR and GARD's Project Engineer arranged for a demonstration of the robot's capabilities at the United States Robot facilities in King of Prussia, Pennsylvania. The results of this demonstration showed that the Maker 100 was a good candidate for inclusion in the final system design definition.

Because of the high cost of robots ($30K-$100K) it was not practical to perform in-house testing during this Phase of the project. However,

the simulated engine inspection routines performed by the Maker 100 during the demonstration at United States Robots assured a high probability of it successfully performing the robotic requirements of our gauging system. A photograph of the Maker 100 Robot from United States Robots is shown in Figure 7.2.

7.4 Main Computer

The MAG System design uses the main computer to interface with and control the robot computer, the electronic gauging subsystem, and the reference standard subsystem. It is necessary that the computer contain software development facilities, hardware expandability, and a bus structure which allowed a modular expansion and I/O approach. Many commercial computers could perform this function. A literature evaluation was performed, and as a result, the Approach II STD BUS development system (Micro Link Corporation) was selected for this application. Various criteria were considered in arriving at this selection. The following paragraphs discuss these criteria with respect to the Approach II system.

Availability of Interface and Accessory Cards

Because the Approach II computer is based on the STD BUS concept, cards are available from a large number of second sources, as well as from Micro Link. The type of cards available include analog and digital I/O, RAM, hard disk interfaces, modems, CPU, and many others.

Ease of Expansion

Once again, since this is a STD BUS computer, cards are simply plugged in or out. No hardware modification is required.

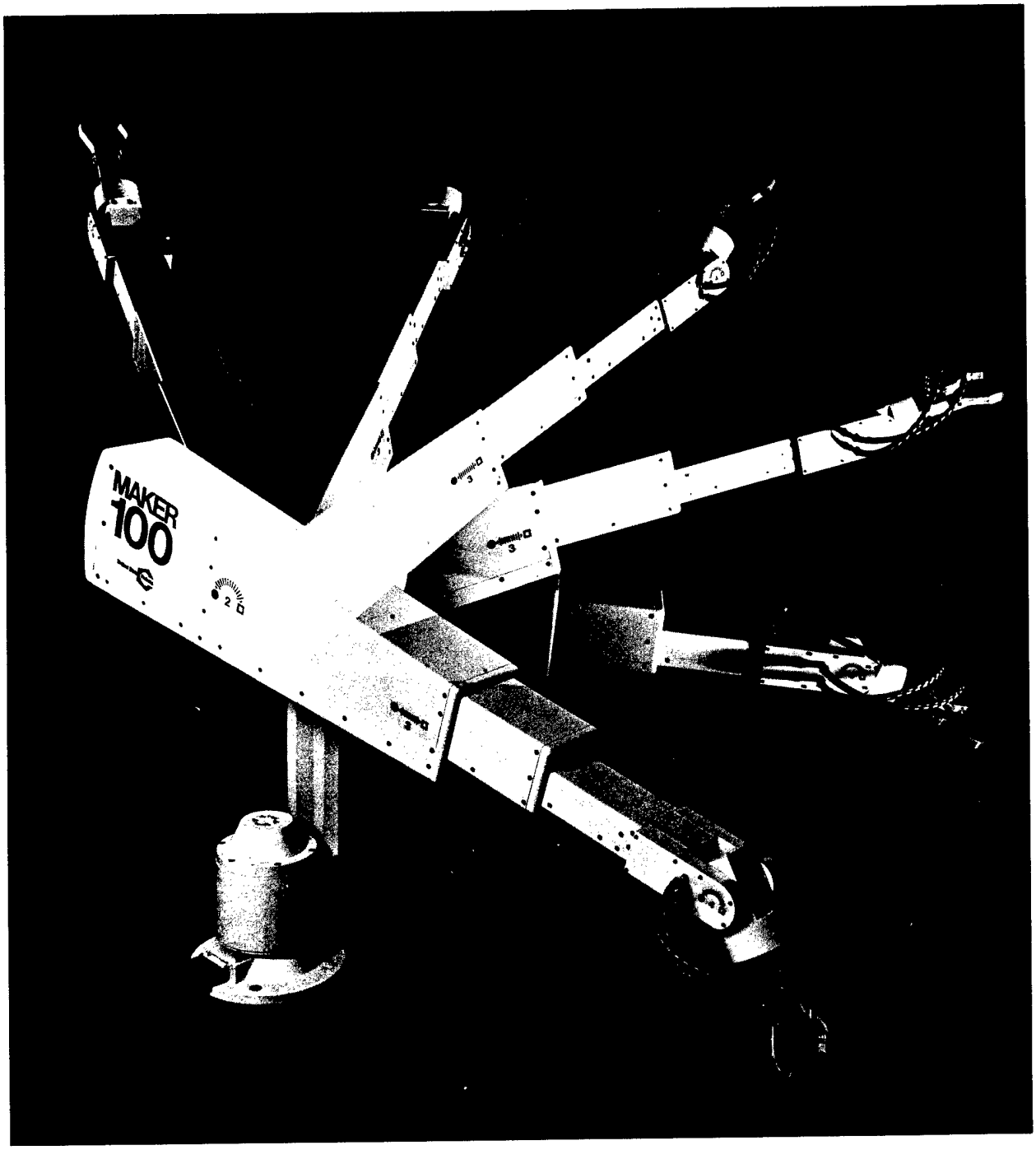

Figure 7.2 The "Maker 100" Robot from United States Robots

Enviornmental Compatibility

The computer is required to operate in the typical Depot environment. The hardware in the Approach II is rated for an ambient temperature range of 0 - 50 degrees C (32 - 122 degrees F). If the present mass storage configuration (floppy disks) were to be retained, additional protection would have to be provided to insure no dust or dirt could reach them; however, in the current prototype MAG system design an alternate form of mass storage will be used.

Serviceability

Servicing is straightforward. A defective board is unplugged and replaced.

SOFTWARE

Program Development Facilities

Ideally, a program development environment for the gauging system would allow high level programming for faster program development as well as facilities for low level routines (high speed data acquisition and transfer). The Approach II system possesses a FORTH language development system which is designed for real-world control and interfacing. The system also contains a monitor program in firmware which is useful during debugging.

Ease of Incorporating New Hardware

A software development system should incorporate new hardware without requiring major software changes. The Approach II system contains subroutines which allow hardware addition (I/O, A/D, etc.) with little software change.

Speed

Often in real-world situations, speed of the software (and hardware) is critical. The FORTH software generated with this system runs at near assembly language speed: it also has the advantage of faster software development time when compared to assembly language.

7.5 Evaluation

The most critical aspect of the MAG System is the selected electronic gauge and its interaction with the concepted reference standard. For this reason, a series of tests were run to evaluate key components of the gauge and reference standard with respect to our prime concerns of dimensional measurement repeatability, accuracy, reliability, and stability.

Repeatability

The intent of the repeatability test was to determine the consistency of the HiTEC hardware readout. This would be determined by seeing if the output readings from HiTEC's electronic gauging system could remain constant if the object being measured was repeatedly placed in and out of the measuring field of a dual probe set-up.

To simulate a typical measurement, which would be required of the final System, two HiTEC probes were put in a holding fixture in a configuration applicable for O.D. measurement (Figures 7.3 and 7.4). A 2 inch calibration block (Grade 3, actual size 2.000000 in. -3×10^{-6} in.) was guided into the measurement field through the use of precision guides in order to ensure repeatable mechanical positioning of the block.

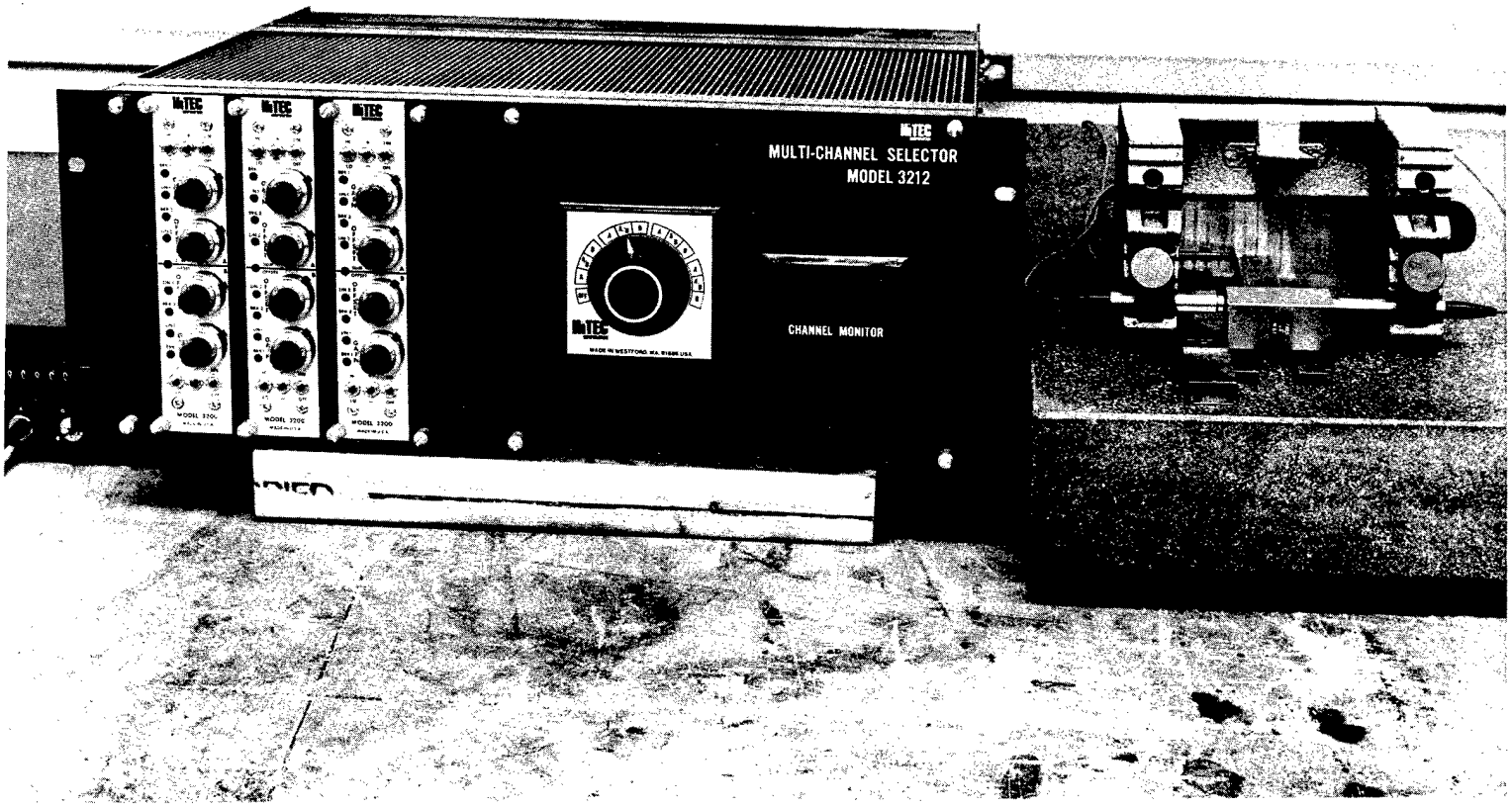

Figure 7.3 Overall View of the Set-Up Used for the Repeatability Test

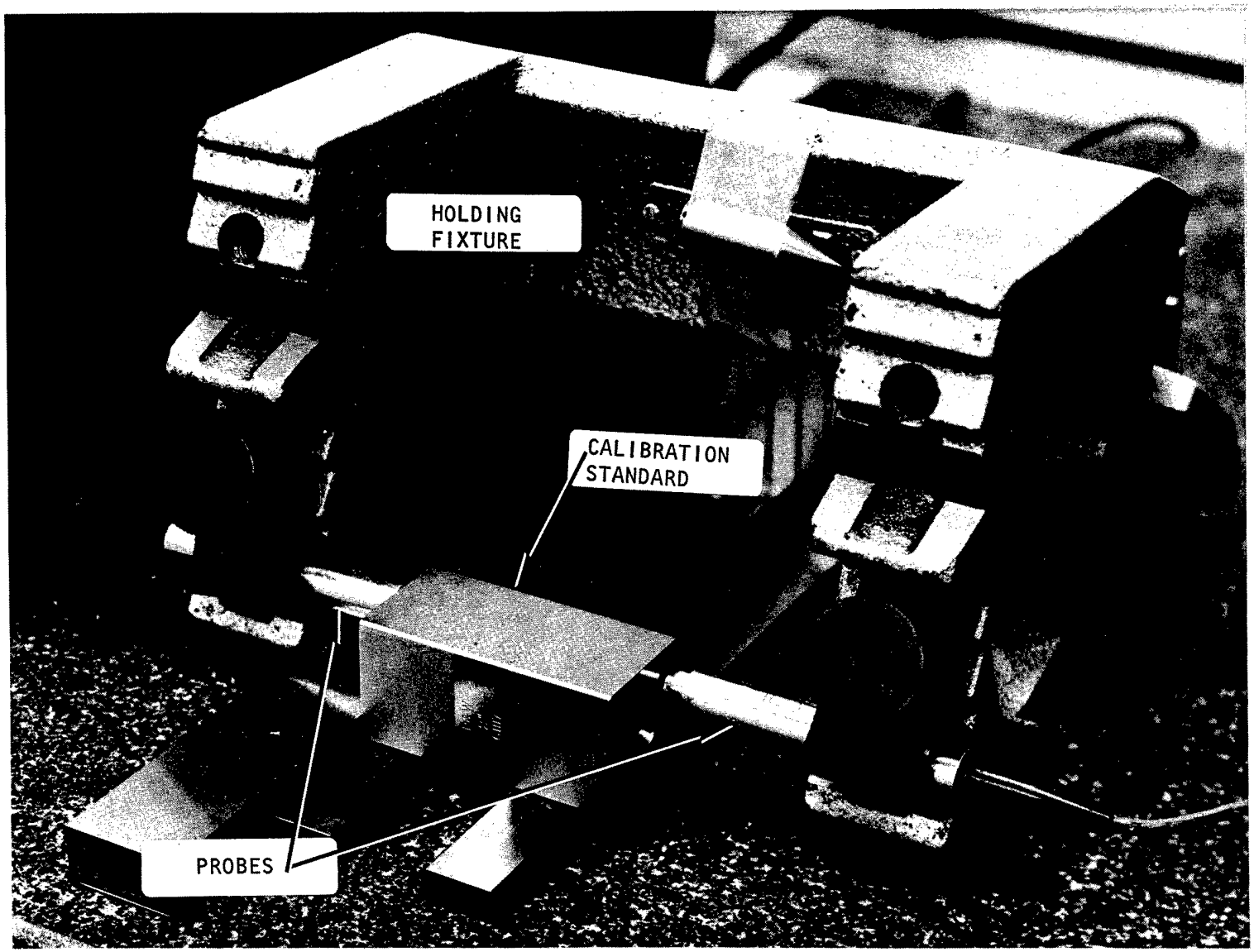

Figure 7.4 Detailed View of the Probes, Holding Fixture and Calibration Block

The test procedure used was: first the calibration block was carefully put in the measurement field, next the summed output reading of the probes recorded, then the calibration block was carefully removed. This procedure was repeated over 50 times. The actual outputs from the HiTEC System were 3.484 volts ±.001 volt (0.03484 inches ±0.0000± inch). The output did not vary by more than ±0.001 volt (±0.0000± inch) for any of the readings.

Accuracy

The purpose of these tests was to verify that the electronic gauging subsystem could be capable of accurate readings over its planned operating range (0.050 inches) at the supplied hardware resolution; a digital meter with 0.001 volts resolution (i.e., a 0.00001 inch) was used.

A Heidenhain scale and readout were used as a reference in the testing. The Heidenhain system used had a calibration data traceable to NBS and accurate to $\pm 0.5 \times 10^{-6}$ inches. It had a readout capable of 0.00005 inch resolution.

The set-up used is shown in Figure 7.5. The graph shown in Figure 7.6 provides an overview of the theoretical response of the probe as a function of distance from a target. This theoretical response was tested at three points: 0.005 inch offset, 0.025 inch offset, and 0.500 inch offset.

The procedure used was to first mechanically "zero" the probe by butting it up against the target and at that point set the Heidenhain output to zero. Then the appropriate mechanical offset was added by moving the slide mechanism (0.005 in., 0.025 in., or 0.050 in.). Once the probe was at the proper offset point, it was stepped in increments of 0.00005 inch over a range of 0.001 inches, and the output from the probe recorded for each step. The raw data from each test is shown in Figure 7.7.

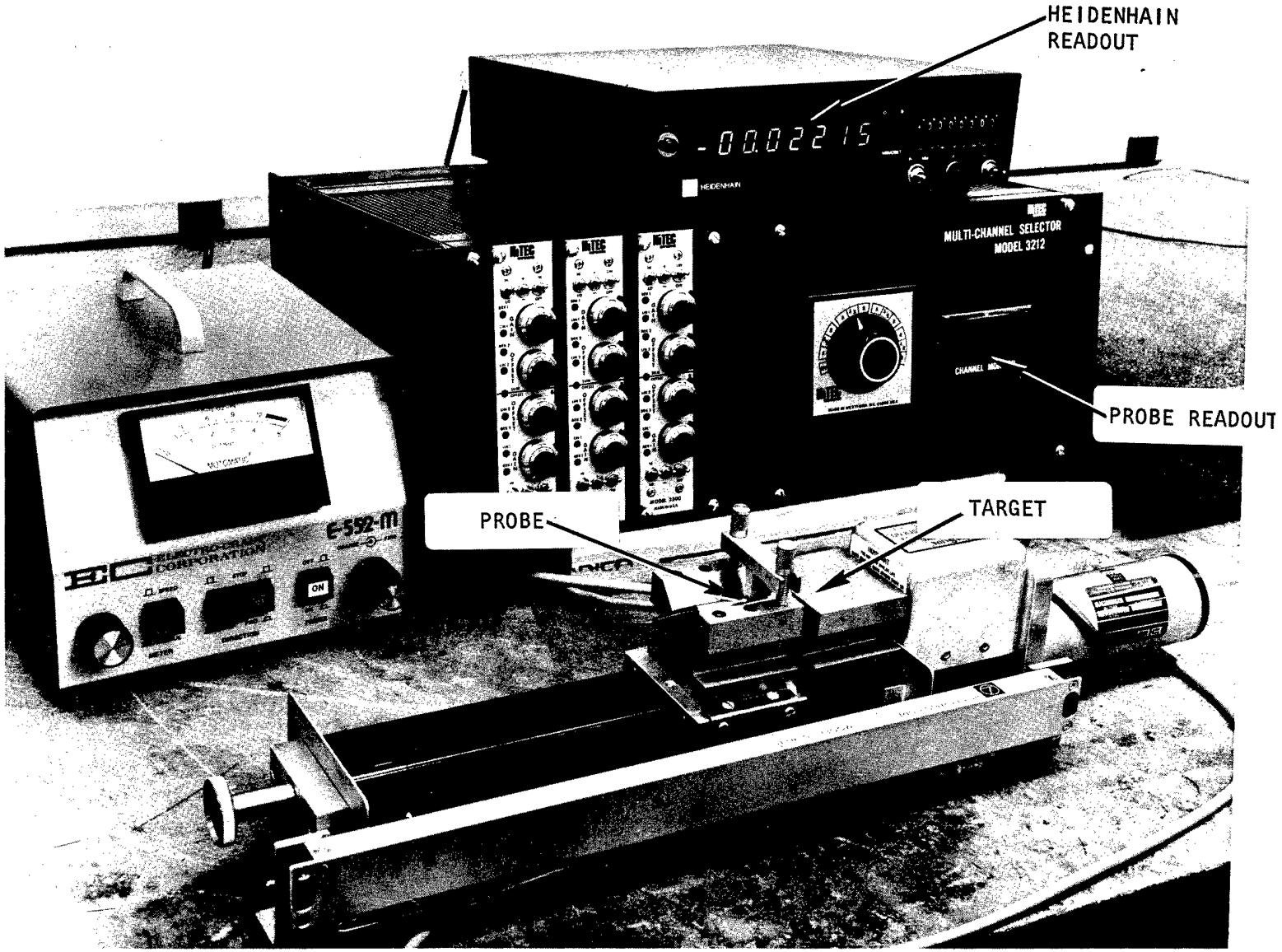

Figure 7.5 Set-Up Used For Accuracy Tests

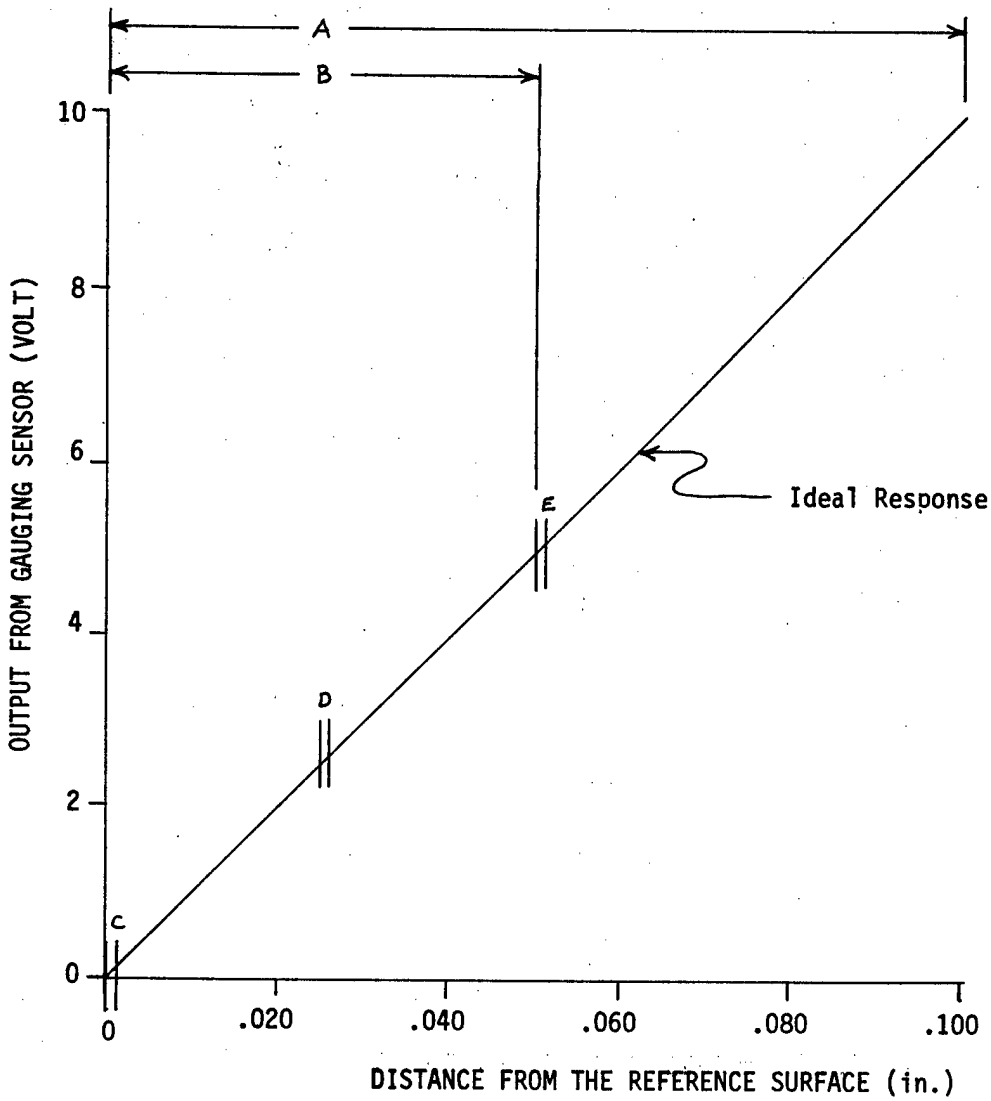

A = Theoretical maximum measurement range (.100 in)

B = Maximum range to be used for each sensor in MAG System (0.050 in)

C = Position shown in Figure 7.8 (0.005 in. offset)

D = Position shown in Figure 7.9 (0.025 in. offset)

E = Position shown in Figure 7.10 (0.050 in. offset)

Figure 7.6 Theoretical Response of the Gauging Probe as a Function of Distance from the Reference Surface

0.005" OFFSET		0.025" OFFSET		0.050" OFFSET	
DISPLACEMENT (Inches,0.00005 Resolution)	PROBE OUTPUT (Volts, 0.001 Resolution)	DISPLACEMENT (Inches,0.00005 Resolution)	PROBE OUTPUT (Volts, 0.001 Resolution)	DISPLACEMENT (Inches,0.00005 Resolution)	PROBE OUTPUT (Volts, 0.001 Resolution)
.00500	.545	.02500	2.569	.05000	5.065
.00505	.551	.02505	2.575	.05005	5.068
.00510	.554	.02510	2.578	.05010	5.073
.00515	.562	.02515	2.587	.05015	5.081
.00520	.566	.02520	2.591	.05020	5.085
.00525	.571	.02525	2.596	.05025	5.089
.00530	.575	.02530	2.602	.05030	5.093
.00535	.584	.02435	2.609	.05035	5.101
.00540	.589	.02540	2.613	.05040	5.105
.00545	.591	.02545	2.616	.05045	5.108
.00550	.602	.02550	2.625	.05050	5.117
.00555	.606	.02555	2.629	.05055	5.122
.00560	.612	.02560	2.632	.05060	5.125
.00565	.616	.02565	2.636	.05065	5.130
.00570	.624	.02570	2.643	.05070	5.137
.00575	.628	.02575	2.648	.05075	5.141
.00580	.633	.02580	2.651	.05080	5.146
.00585	.637	.02585	2.656	.05085	5.150
.00590	.647	.02590	2.664	.05090	5.154
.00595	.650	.02595	2.668	.05095	5.159
.00600	.655	.02600	2.671	.05100	5.163

Figure 7.7 Raw Data Collected From Accuracy Test

Before the experiment began, an attempt was made to linearize the response of the probe over a 0 to 0.050 inch range. However, since the linearization was not absolute, a linear regression line was calculated and plotted for each set of data. The formula used calculating the linear regression line was:

$$\hat{y} = b \cdot x + (\bar{y} - b \cdot \bar{x})$$

where

$$\bar{x} = \frac{\Sigma x_i}{n}$$

$$\bar{y} = \frac{\Sigma y_i}{n}$$

and

$$b = \frac{\Sigma(x_i - \bar{x})y_i}{\Sigma(x_i - \bar{x})^2}$$

The results of these calculations (in original units) are:

0.005 in. offset: $\hat{y} = 116.6\frac{v}{in}x - 0.0009v$

0.025 in. offset: $\hat{y} = 102.4\frac{v}{in}x + 0.0016v$

0.050 in. offset: $\hat{y} = 100.6\frac{v}{in}x - .0004v$

From the above values, it can be seen that although the theoretical value of the slope should be the same in each case, (per manufacturer's information) it is not. This small non-linearity does not present a major problem (it could be compensated for in software). However the manufacturer of the probes (HiTEC) has been notified and is investigating.

Graphs of the raw data, regression lines, and maximum allowable error band are presented in Figures 7.8 through 7.10.

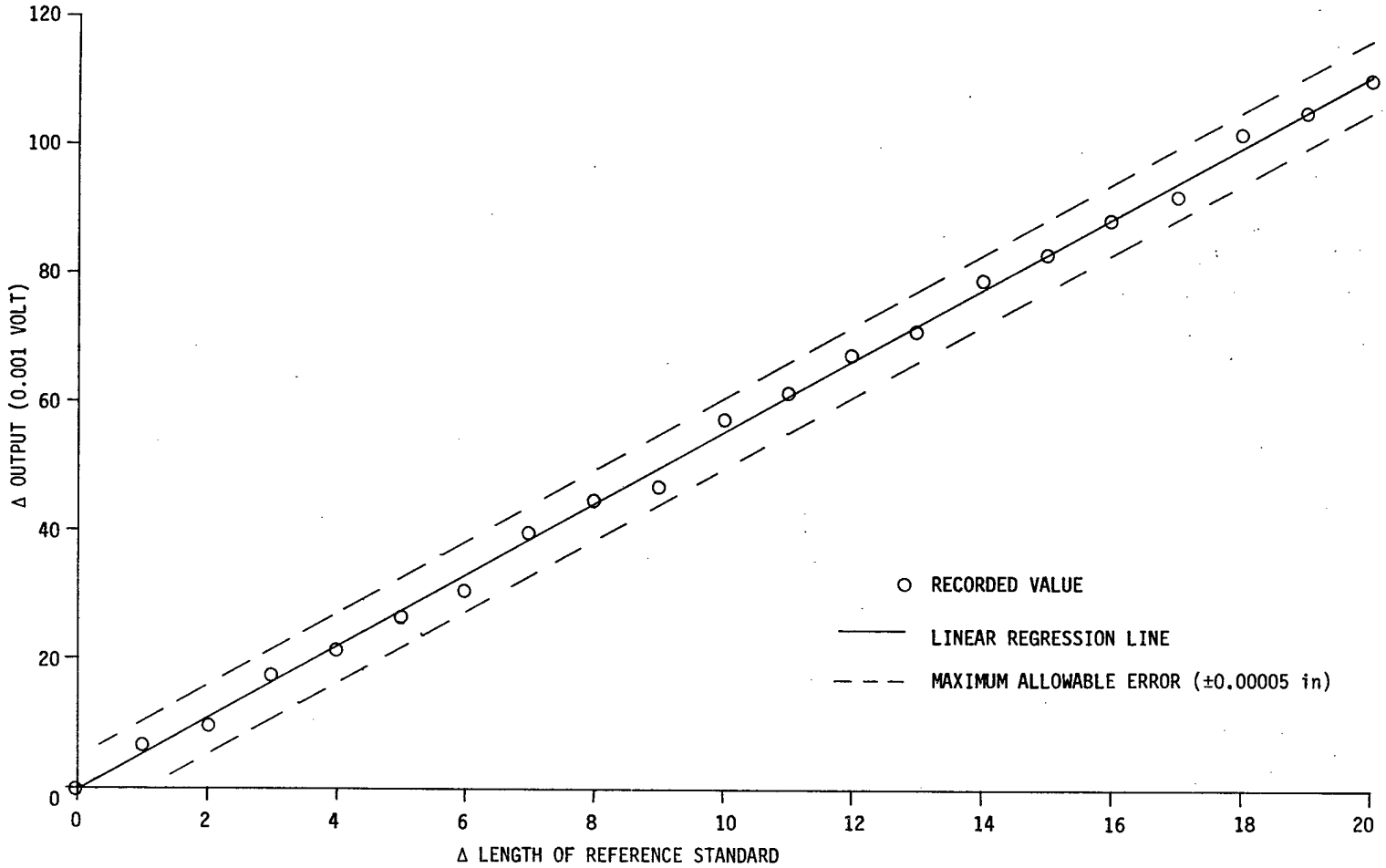

Figure 7.8 CHANGE IN LENGTH OF REFERENCE STANDARD VS. CHANGE IN OUTPUT FROM GAUGING SENSOR (0.005 in OFFSET)

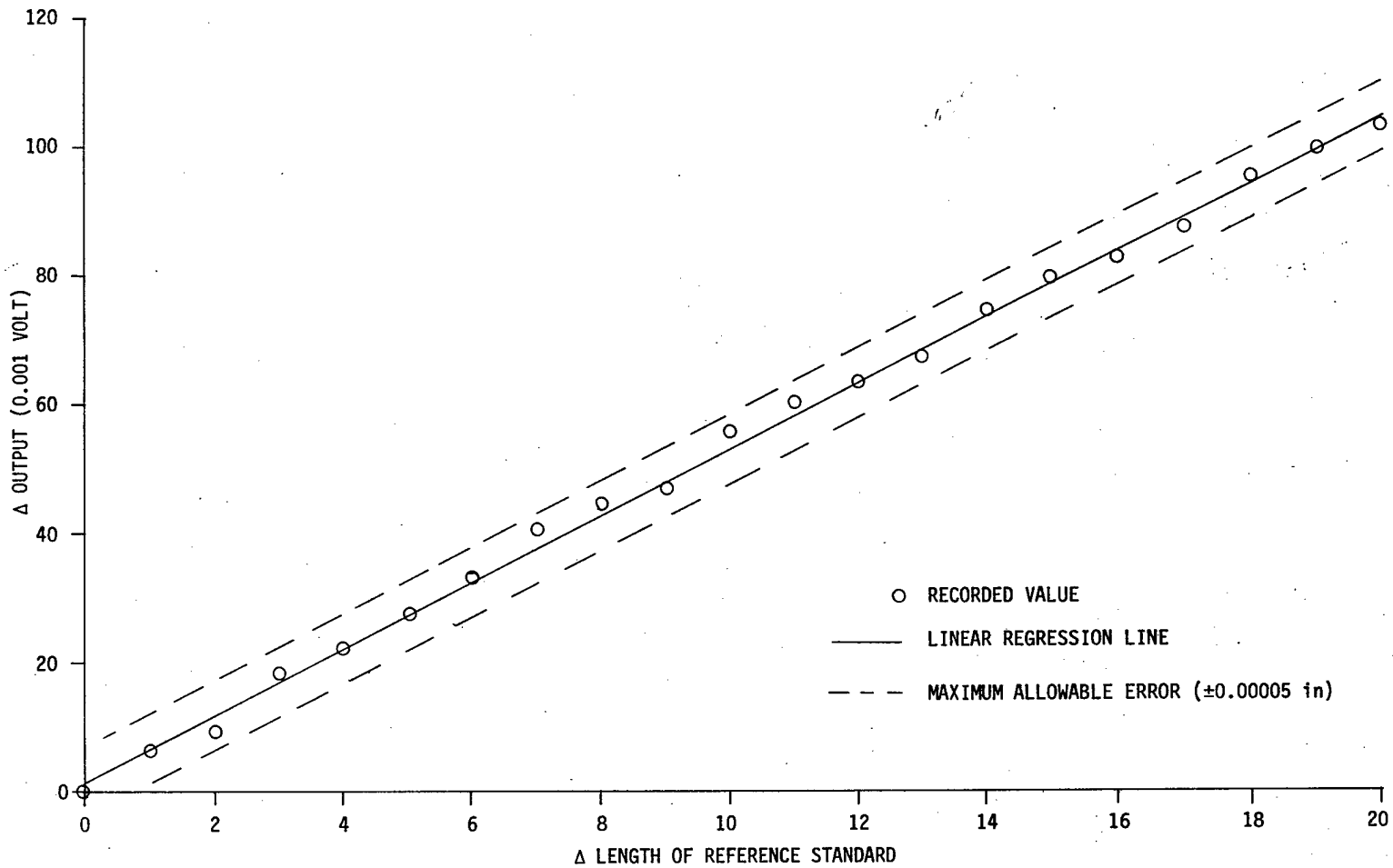

Figure 7.9 CHANGE IN LENGTH OF REFERENCE STANDARD VS. CHANGE IN OUTPUT FROM GAUGING SENSOR (0.025 in. OFFSET)

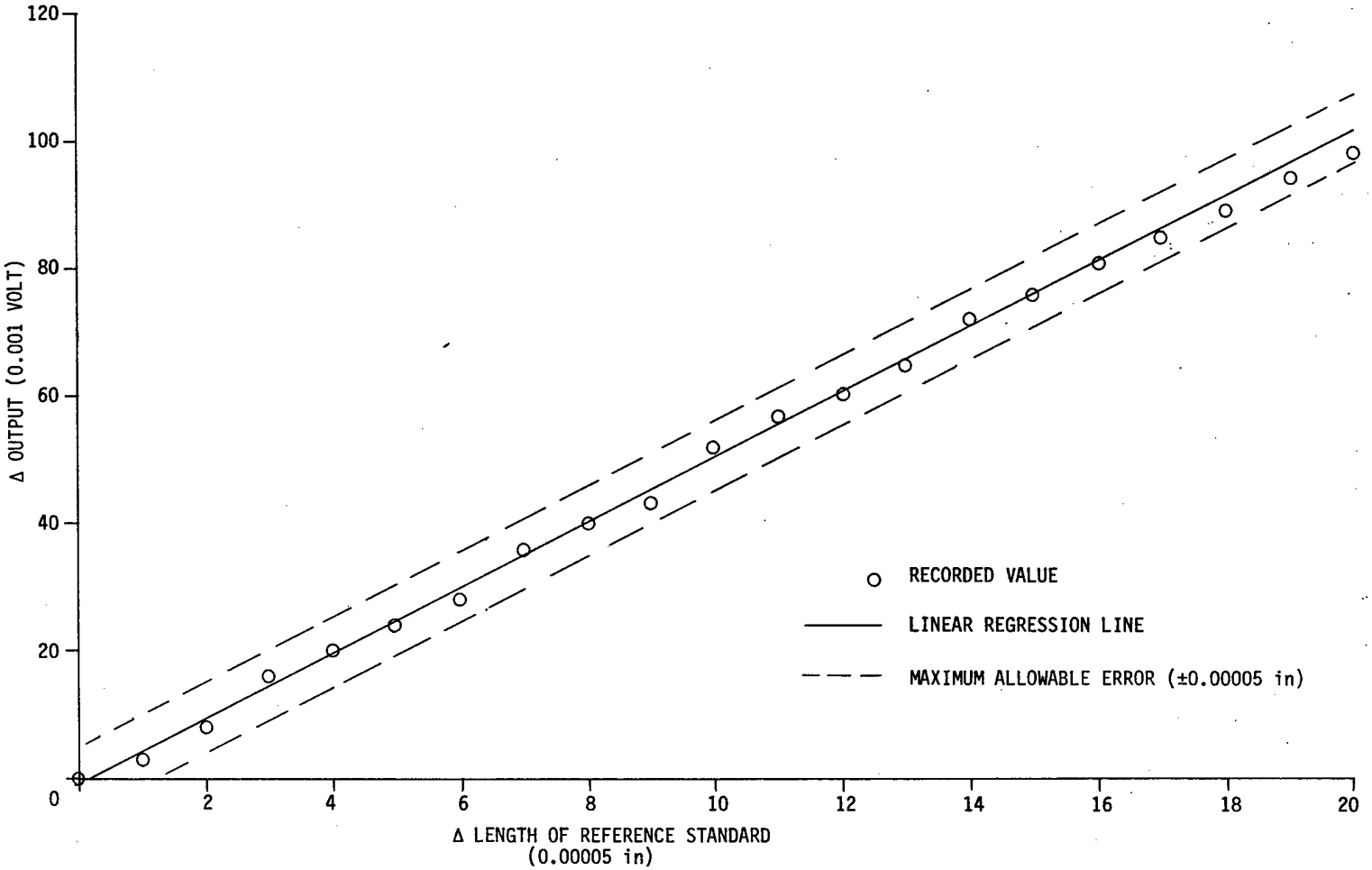

Figure 7.10 CHANGE IN LENGTH OF REFERENCE STANDARD VS. CHANGE IN OUTPUT FROM GAUGING SENSOR (0.050 in. OFFSET)

To evaluate the recorded data at each offset range, the raw data was compared to a perfect response (regression line). The technique used was to calculate the Standard Error of Estimate. This technique compares the actual data to the predicted perfect response of the system and is based upon the following formula:

$$s = \sqrt{\frac{\Sigma(y_i - \hat{y}_i)^2}{n-2}}$$

where y_i is the actual value

$\hat{y}_i$ is the predicted data

and n = the number of data points.

The results of these calculations (in original units) are:

0.005 in. offset: s = 0.0015 volt which is equivalent to 0.00001 inch

0.025 in. offset: s = 0.0016 volt which is equivalent to 0.00002 inch

0.050 in. offset: s = 0.0014 volt which is equivalent to 0.00001 inch.

These standard error of estimate values show that the errors between actual system response vs. theoretical perfect system response are negligible therefore providing confidence in the use of the non-contact probes and associated electronics.

It could be noted that some of the individual measurements shown in Figures 7.8, 7.9 or 7.10 are inaccurate to 1/2 the System allowable errors. However we currently feel that much of these individual error variances are due to the manual method of measurement and our visual interpretation of the Heidenhain digital readout incrementation.

Stability

The stability of the electronic probes is important because the MAG System will depend upon the probes (and associated electronics) to hold a measured dimensional value until that value can be transferred to the reference standard.

To test the stability the probe was held in a stationary fixture looking at a fixed target. The output from the probe system was converted to a dimension and the dimension was recorded at 30 minute intervals over a period of approximately 12 hours. The results of this test are shown in Figure 7.11. As can be seen, the recorded dimension remained the same for the first 6-1/2 hours, changed by 0.0001 inch at 7 hours, then once again returned to its original value for the remaining 6-1/2 hours.

Since the MAG System is intended to transfer the measurement in seconds, the results of this test show more than adequate stability.

The effect of changes in humidity and air currents was investigated and the results showed that as long as the change in humidity was non-condensing, there was no detremental effect. Air currents had no effect on dimensional readings.

```
HITECLOG
ok
20 FEB 1984   15:42
 0.0285

20 FEB 1984   16:12
 0.0285

20 FEB 1984   16:42
 0.0285

20 FEB 1984   17:12
 0.0285

20 FEB 1984   17:42
 0.0285

20 FEB 1984   18:13
 0.0285

20 FEB 1984   18:43
 0.0285

20 FEB 1984   19:13
 0.0285

20 FEB 1984   19:43
 0.0285

20 FEB 1984   20:13
 0.0285

20 FEB 1984   20:43
 0.0285

20 FEB 1984   21:13
 0.0285

20 FEB 1984   21:43
 0.0285

20 FEB 1984   22:13
 0.0284

20 FEB 1984   22:43
 0.0285

20 FEB 1984   23:13
 0.0285

20 FEB 1984   23:43
 0.0285

20 FEB 1984   00:13
 0.0285

21 FEB 1984   00:43
 0.0285

21 FEB 1984   01:13
 0.0285

21 FEB 1984   01:43
 0.0285

21 FEB 1984   02:13
 0.0285

21 FEB 1984   02:43
 0.0285

21 FEB 1984   03:13
 0.0285

21 FEB 1984   03:43
 0.0285

21 FEB 1984   04:13
 0.0285

21 FEB 1984   04:43
 0.0285
```

Figure 7.11 Results of the Long Term Stability Test Showing Date, Time and Dimension

8.0 FINAL SYSTEM DESIGN DEFINITION

This section will present GARD's Final System Design Definition for the prototype Mobile Automatic Gauging System. The final prototype design is based upon the knowledge gained from all of the previous analyses, evaluations, and technical discussions between GARD, TACOM, and RRAD.

The side view and end view of the MAG System are shown in Figures 8.1 and 8.2. As can be seen, the final MAG System design is similar to the preliminary conceptual system. A block diagram of the System is shown in Figure 8.3.

All of the electronics for the MAG System are contained in the cabinet shown on the left side of the cart. The cabinet is facing the side of the cart to provide easy access to both the front and back doors as well as providing a convenient CRT display close to gauging area.

The robot arm is mounted in an overhead position to allow a maximum use of the robot's work volume. The post to which the robot arm is attached is mounted on a mechanically actuated slide arrangement under the cart which automatically moves the post to the two operating postions of the robot. The mechanical actuator (such as an electric cylinder or air cylinder) holds the post against a fixed stop to insure positional accuracy and repeatability. These two positions allow the robot to reach all necessary parts of the 6V53 engine block without having to manually move the engine block. The Heidenhain reference standard is mounted in a position which allows the gauging head to reach it when the robot is in either position. An example of the

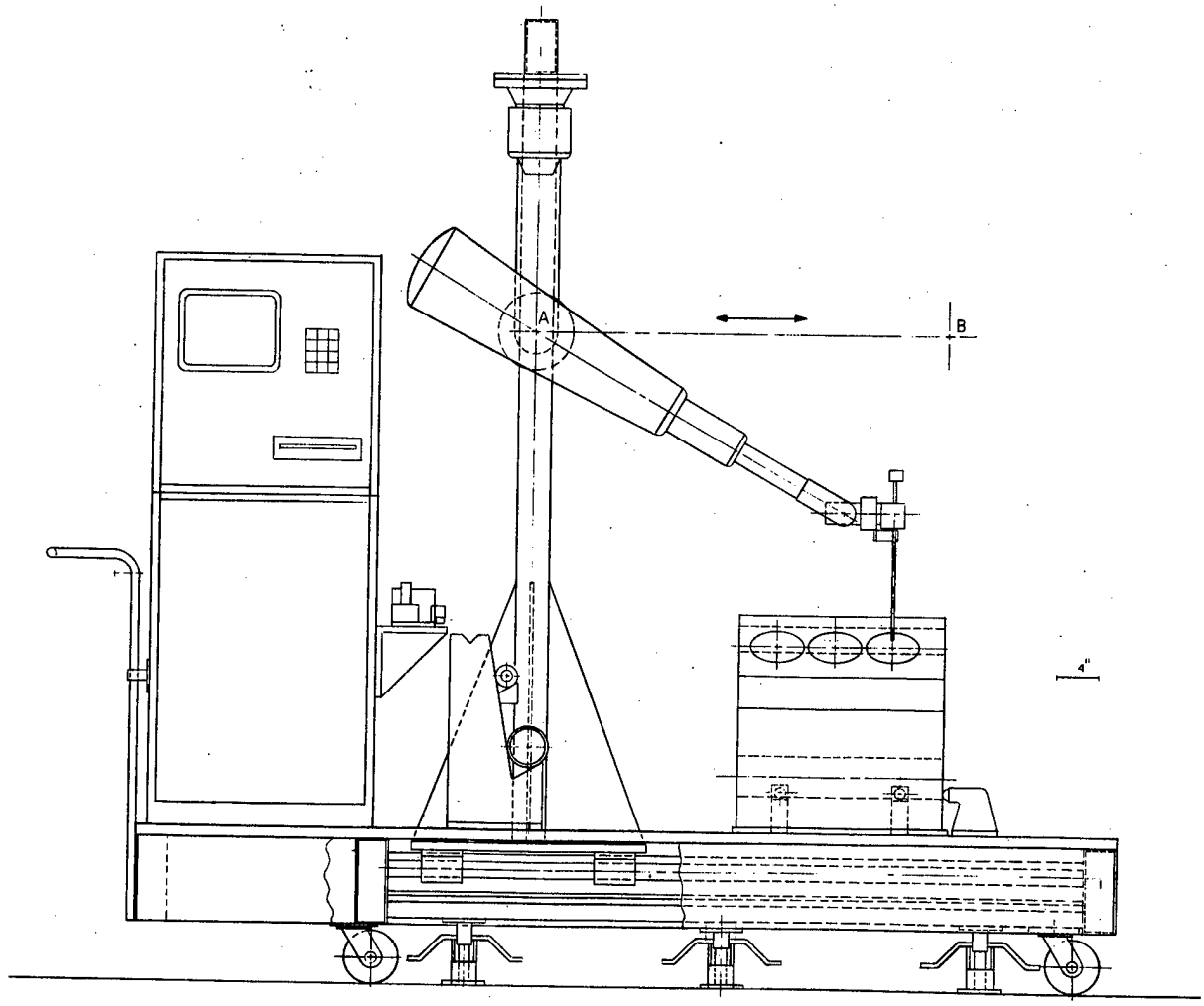

Figure 8.1 SIDE VIEW OF PROTOTYPE MAG SYSTEM

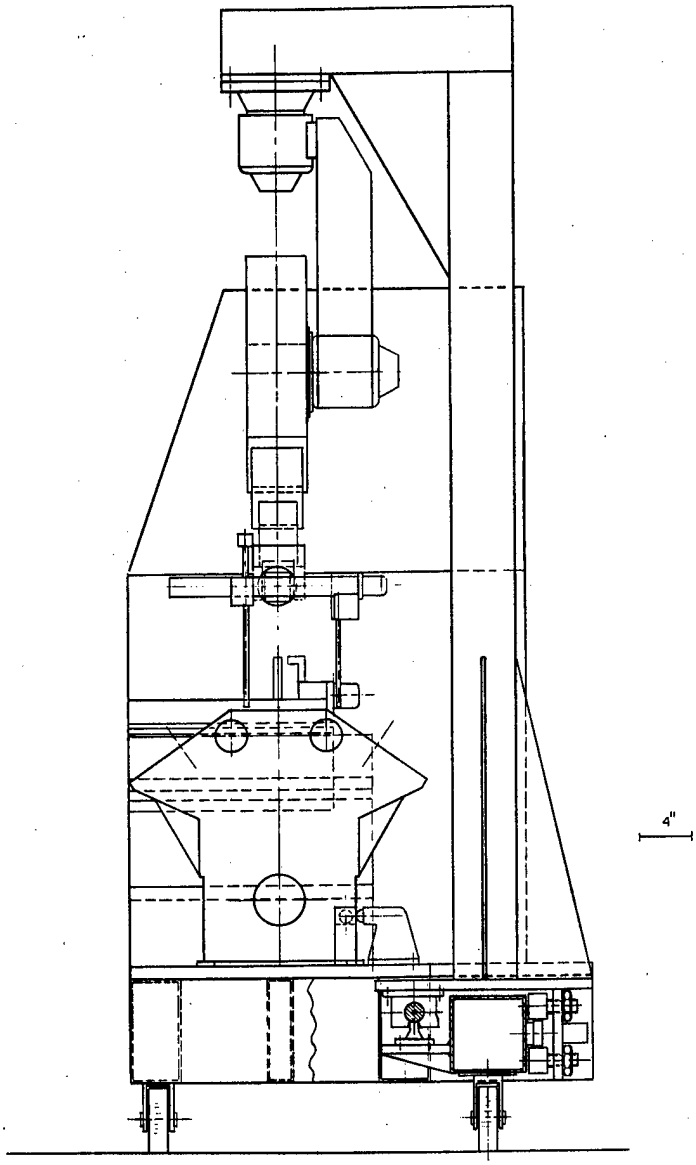

Figure 8.2 END VIEW OF PROTOTYPE MAG SYSTEM

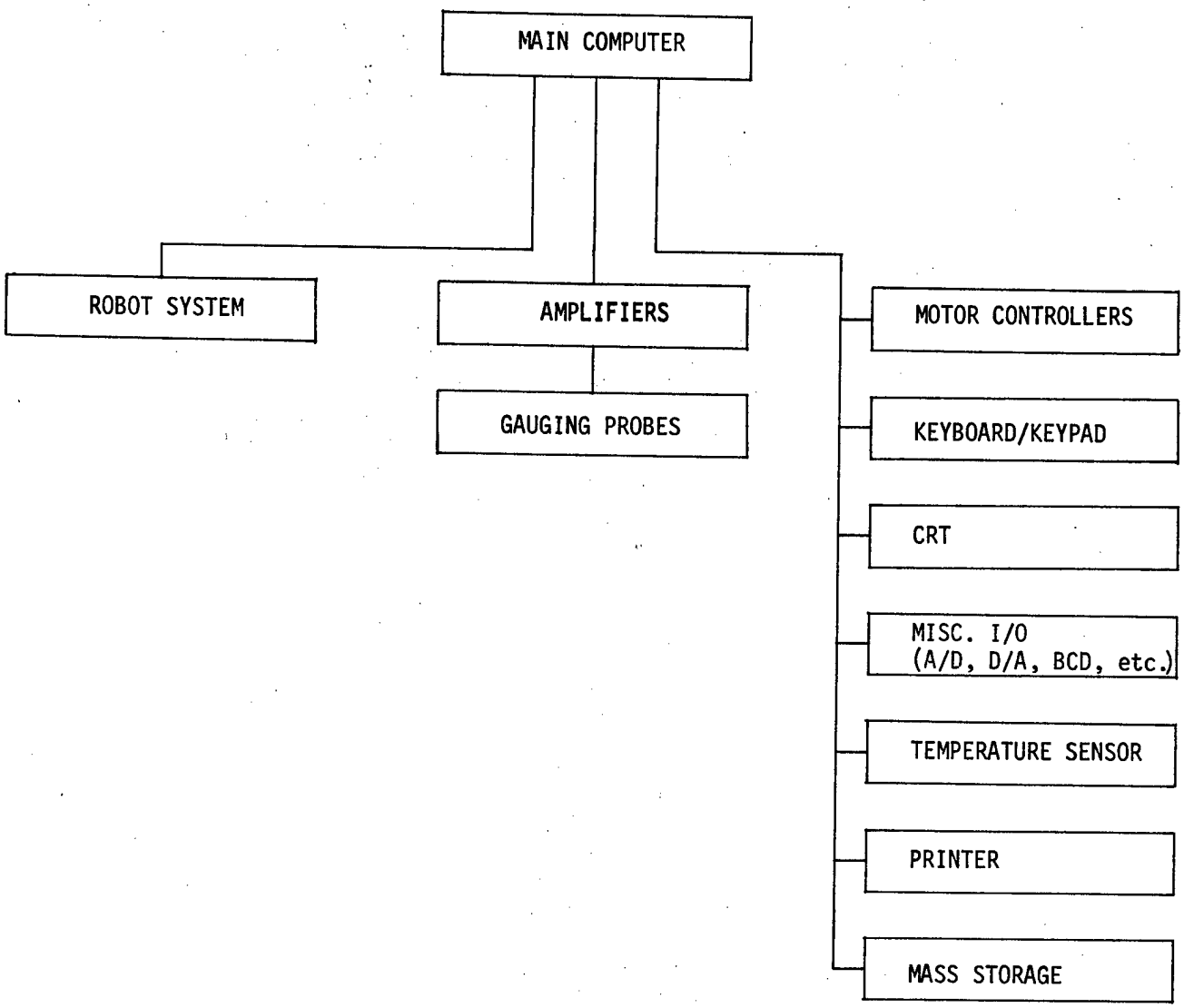

Figure 8.3 MAG System Block Diagram

robot arm positioning the gauging device at various parts of the block is shown in Figure 8.4.

The cart will be designed for rigidity and minimum weight. The top surface of the cart will protect the post moving device and rails from accidential damage (such as dropping an engine block). Under the cart are three floor lock brakes which will be used to lock the cart in position and prevent rolling while the MAG System is in use. The use of three floor brakes will provide stability on uneven floors.

8.1 Subsystem Description

The MAG System consists of four major subsystems: gauging, reference, robot, and main computer . This section will provide detailed descriptions and technical information for each of these subsystems.

8.1.1 Gauging Subsystem

The Electronic Gauging subsystem was introduced in Section 7.1. This section will present details of the version which will be implemented in the prototype MAG System.

The gauging "head" shown in Figure 8.5 consists of two probes (each containing three sensors), two stepper motors which are controlled by the main computer, and a mechanism which holds the probes and provides relative motion of the probes. The probes will normally operate in pairs for such measurements as I.D., O.D., and depth. Individual outputs from the probes are available for use when required.

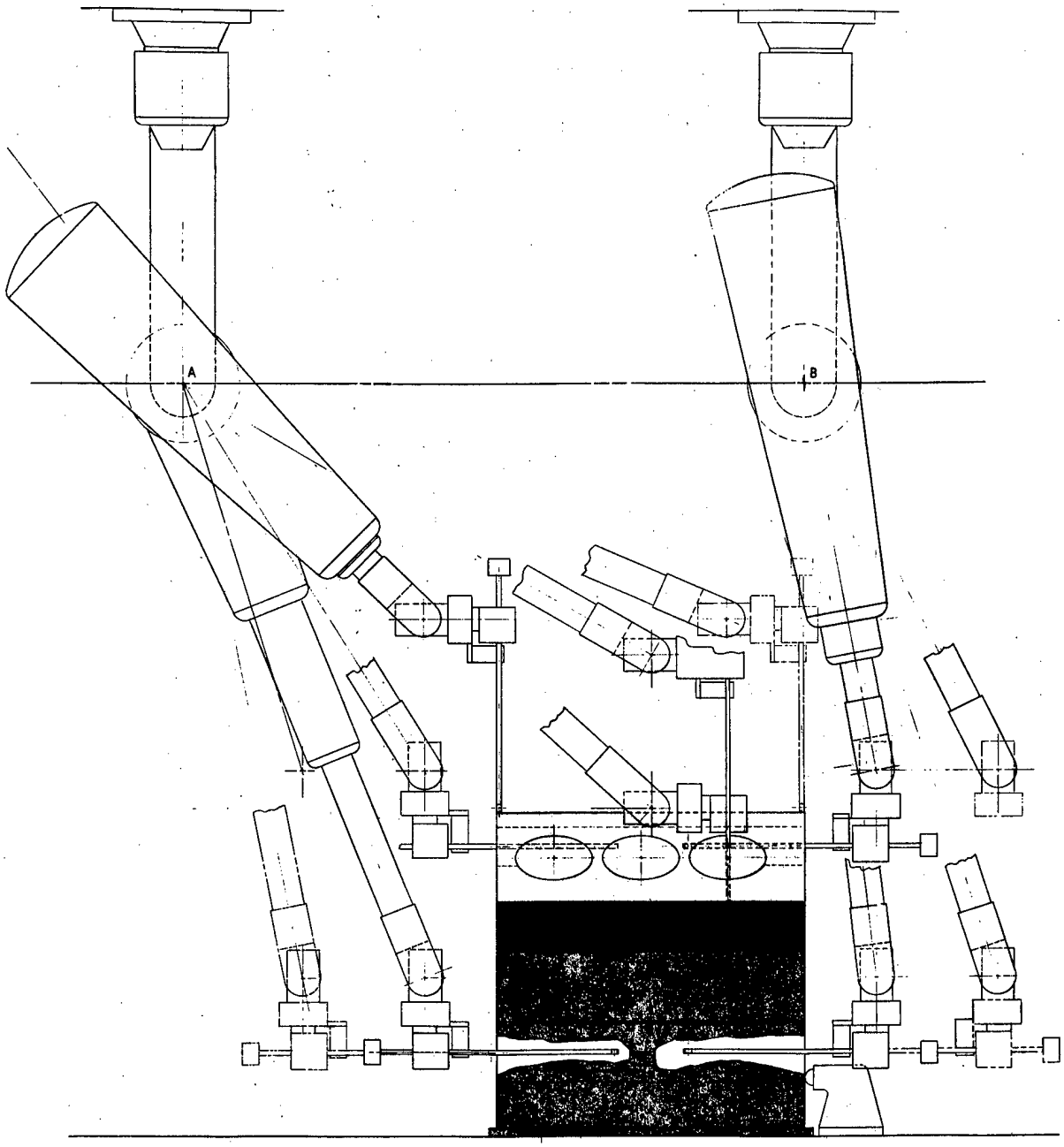

Figure 8.4 EXAMPLE OF GAUGING PROBE PLACEMENT AT VARIOUS PLACES ON THE 6V53 ENGINE BLOCK

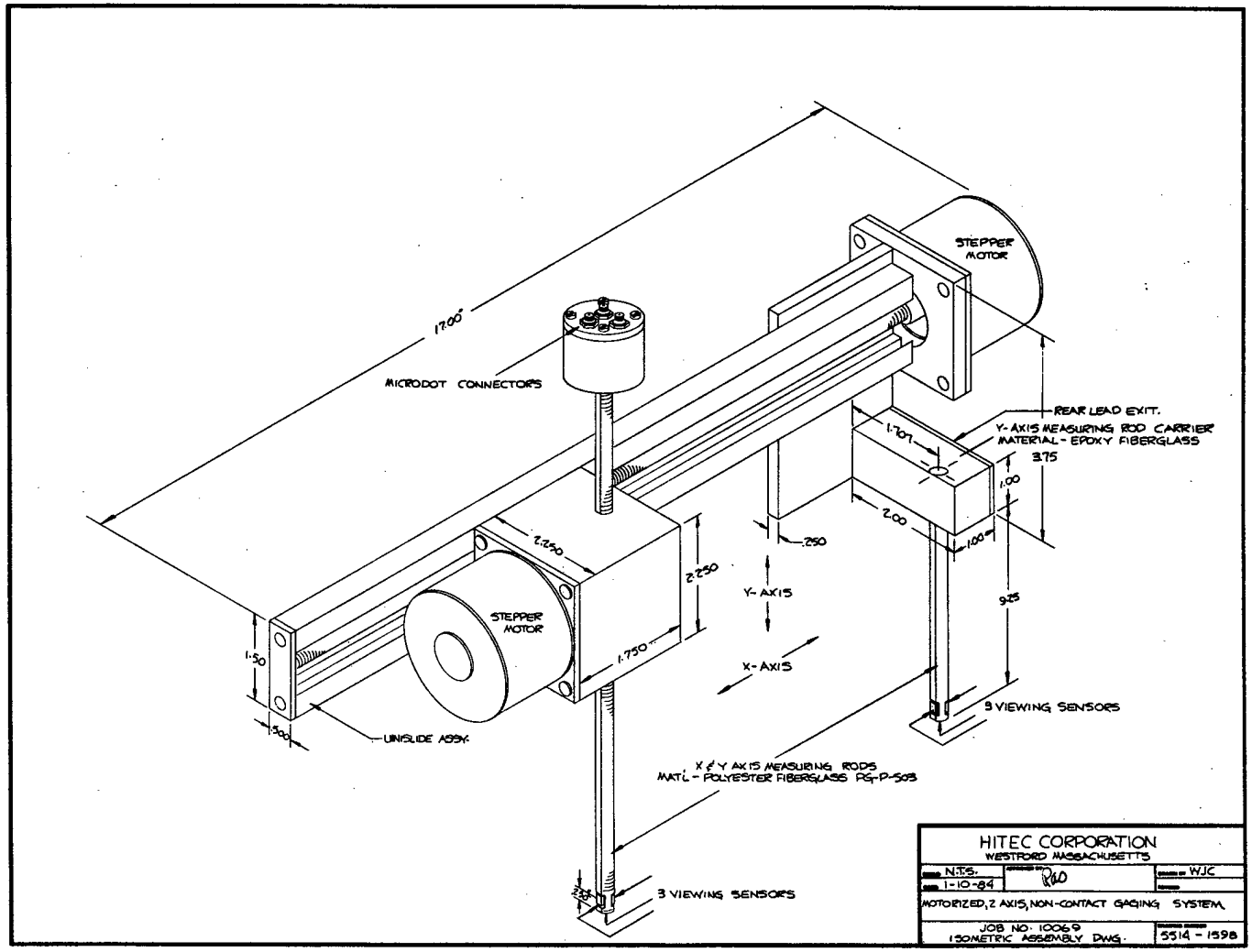

Figure 8.5 ELECTRONIC GAUGING SUBSYSTEM

The amplifier used in conjunction with the capacitive displacement probes produces an output voltage proportional to the gap spacing between the probes and the target (object to be measured). The amplified signals from the probes are read by the main computer for processing. A functional block diagram of one pair of probes and associated amplifiers is shown in Figure 8.6. They are designed to produce stable and reliable operation with excellent gain and zero stability with respect to changes in ambient temperature. Stability is achieved with a digitally derived sine-wave oscillator, having a crystal clock oscillator as the frequency reference. Other features include snychronous detection, low drift operational amplifiers, and a modular power supply. The units also contain linearization circuitry and are self-powered, requiring only A.C. line voltage.

The technical specifications for the gauging subsystem follow:

Input Probe:	Capacitive Displacement Type.
Input Cable:	Low Noise Coaxial Cable, 100 percent shield required. Maximum recommended length, 30 feet.
Input Connector:	BNC type.
Linear Range:	50 mils as specified (with linerization) 100 mils probable.
Linearity:	± 0.02 percent of full scale.
Measuring Surface:	Electrically conductive (metallic).
Probe Excitation	
Voltage:	AC, proportional to Gap, 3V p-p max.
Frequency:	15,625 KHz ± 0.01 percent.
Linearization:	2 positive slope corrections with adjustable break-points and slope.

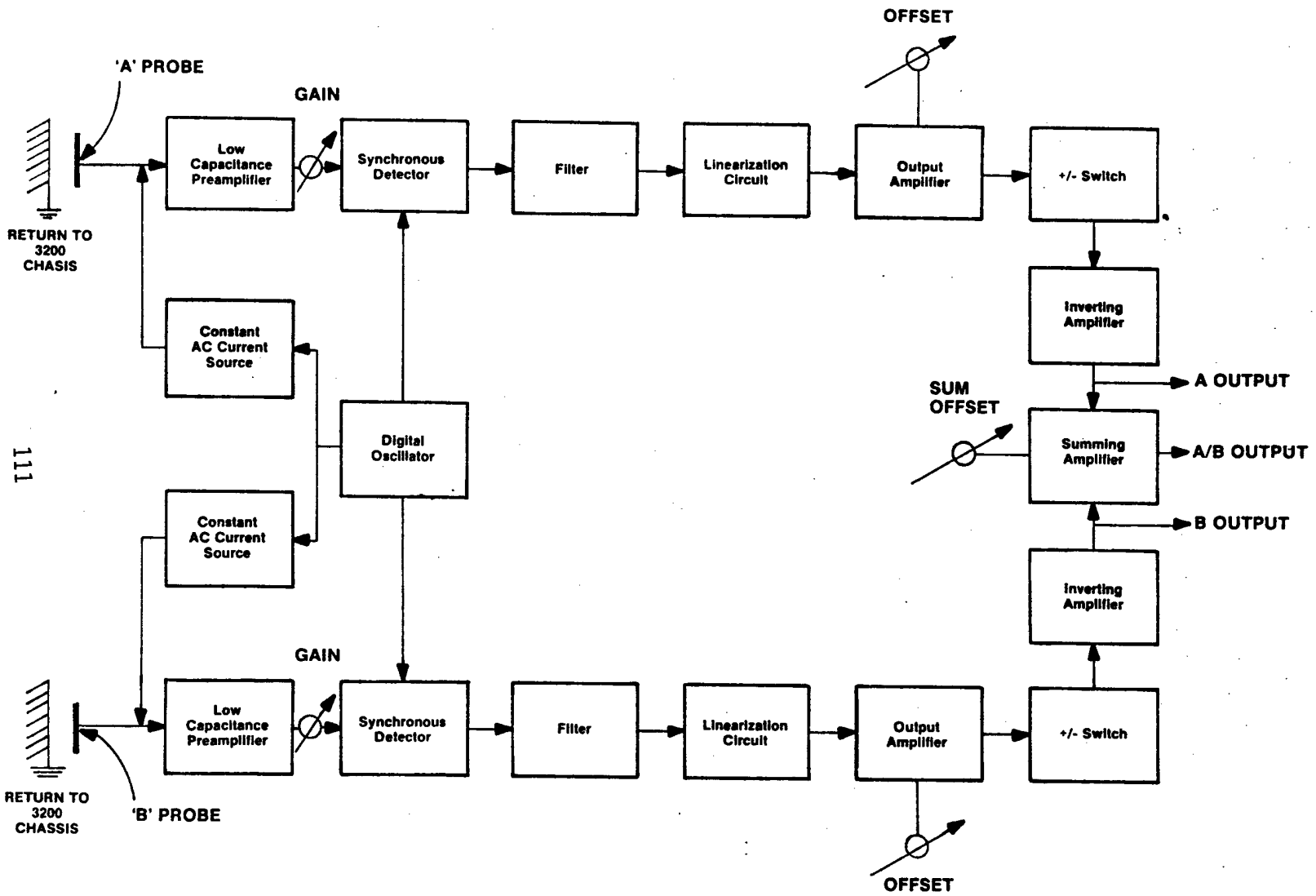

Figure 8.6 FUNCTIONAL BLOCK DIAGRAM OF ONE PAIR OF PROBES AND REQUIRED ELECTRONICS

Analog Output:	± 10 volt signal, proportional to gap.
Output Impedance:	100 ohms.
Output Summing:	(±A) + (±B), ± .02 percent accuracy.
Offset Adjustment	-10 volts to +10 volts.
Frequency Response:	-3db at 200 Hz.
Permissible Ambient Temperature Range:	32°F to 140°F.
Permissible Relative Humidity:	≤ 99 percent non-condensing.
Power Requirements:	105 to 130V AC, 50-60 Hz.
Physical Dimensions:	7 in. high, 19 in. wide, rack.
Weight:	2.5 lbs each card (3 cards), plus 5 lbs for rack.

Controls

All controls are located on the front panel. The controls are not available to normal operating personnel.

The upper (left) half of the front panel controls on the dual channel models are devoted to all controls for the 'A' channel. The lower (right) half of the front panel has all 'B' channel controls. The only control (SUM OFFSET), that effects both channels is located on the center line dividing the upper from the lower half. The center line also acts as the reference for the mirror image arrangement of the 'A' and 'B' channel controls. Note that this arrangement permits symmetrical control grouping with an upside-down order for the 'B' channel. The following description of the control functions applies without exception to controls labelled the same way but located either in the 'A' channel of the 'B' channel.

The HI-LO switch changes the probe excition current by a factor of 2 from the low to the high position. Normally, this control is used in the

HI position with a sensor of the standard size. Smaller sensors will, in general, require the LO position.

The +/- switch allows inverting the voltage output to produce a positive or negative voltage proportional to the space between the probe and target.

The LIN-ON switch activates the linearization circuit. In the off position the switch makes the BRK1, LIN1, BRK2 and the LIN2 controls inoperative.

The BRK1, LIN1 controls, as well as the BRK2, LIN2 controls are recessed behind the front panel. A small screwdriver is needed to operate these controls. They are active only with the LIN switch in the 'ON' position and activate a two break, positive slope function generator operating on the output signal. The circuit is used to linearize the capacitive probe characteristics.

The GAIN control is a 10 turn potentiometer with a counting dial, permitting accurate gain settings. The counting dial divides each turn into 100 graduated positions permitting a resolution of 1000 to 1. The dial setting can be used to pre-set the gage calibration without a calibration procedure.

The OFFSET control is a 10 turn potentiometer with a counting dial, similar to the GAIN control. 'Zero' offset is at a dial setting of 500 (at the center of the 10 turn control). Above 500 the control adds a positive voltage to the output, proportional to the dial setting. Below

500 the control adds a negative voltage to the output. It does not effect the GAIN or linearization control settings. The maximum offset attainable is plus and minus full scale (or 10 volts).

The SUM OFFSET control (dual channels only) is similar to the individual offset controls for the two channels. It allows offsetting the summing amplifier up to plus or minus full scale. When used with the +/- switches, this feature allows direct measurement of thickness, inside diameters, outside diameters, slope, etc.

Interfaces: 16 channel 12 bit analog to digital converter card to interface to STD bus (main computer)

8.1.2 Reference Standard Subsystem

The Reference Standard Subsystem will be based upon the system evaluated in Section 7.2. The two main parts of the System are a motorized slide mechanism and a precision Heidenhain incremental length measuring system (linear transducer and readout).

The Heidenhain Transducer consists of a fixed glass scale (∿12 in. long) and a moveable scanning head. The scanning head is connected to the moveable carriage portion of the slide mechanism. Mounted on the slide carriage are two metal blocks which are used by the gauging head as targets when transferring dimensions.

During operation, the main computer controls the motorized slide which causes the scanning head to be guided along the glass scale. The light from long-life (∿100,000 hours) incandescent lamps is passed through the

light transmitting zones of the incremental scale and onto the photodetectors which are aligned in accordance with the scanning windows. Relative movement of the scanning head to the scale produces light-dark variations which are converted into sinusoidal signals by the photodetectors. Further processing of these signals is carried out within the readout unit. The signal from the readout unit is displayed on a digital LED readout and also converted into a Binary Coded Decimal (BCD) format for use by the main computer.

The glass scale is provided with two absolute reference markings which enable re-establishing the reference datum after operational interruption (such as power loss) and from day to day.

The technical specifications of the reference standard subsystem follows:

Linear Scale

Measuring Length:	12 inch.
Scanning Principle:	Photo-electric, transmitted light.
Scale:	Glass scale section with DIADUR grating.
Grating Constant:	20μm.
Light Source:	Miniature lamp, pre-adjusted, 5V/0.6W, average service life 100,000 hrs.
Scanning Elements:	Silicon solar cells in push-pull arrangement.
Pulse Shaping Electronics:	Built into HEIDENHAIN counter.
Accuracy:	.00002 in/40 in.
Resolution:	.00001 in.
Reference Mark:	2 reference marks standard, each at 1.4 in. from either end of measuring length.

Maximum Permissible Traversing Speed:	
No extension cable	(1,191 in.)/min.
2m (6.7 ft.) extension cable	(945 in.)/min.
7m (23.5 ft.) extension cable	(630 in.)/min.
17m (57 ft.) extension cable	(354 in.)/min.
Permissible Acceleration While In Operation:	98.4 ft./sec^2.
Required Feeding Power:	$\leq$ 1.34 lb.
Sealed Protection:	IP 53 (DIN 40 050), if mounted according to instructions.
Permissible Ambient Temperature Range:	32°F to 140°F.
Coefficient of Linear Expansion	11×10^{-6} K^{-1}.
Transducer Corrosion Protection:	Anodized surfaces.
Storage and Transport Conditions:	
Permissible temperature	4°F to 158°F.
Permissible acceleration	200 ft./sec.^{2}.
Permissible shock load	656.2 ft./sec.^{2}, pulse duration 5ms.
Output Signals of Transducer:	Two sinusoidal signals phase shifted 90 degrees.
Output Current:	9 to 13 μA at 1 kohm load (incremental track signals).
	1.5 to 5.5 μA at 1 kohm load (reference marking signals).
Permissible Relative Humidity:	$\leq$ 95 percent non-condensing.
Maximum Permissible Deviation of Scanning Ratio:	± 15 degrees.
Phase Angle:	
Between both signals of incremental track	90 degrees ± 10 degrees.
Between 0 degree -signal and reference pulse	45 degrees ± 30 degrees.
Transducer Supply Voltage:	5V for lamp.
Transducer Weight:	0.22 lb + 1.1 lb/40 in.
Length of Cable on Transducer:	10 ft.
Maximum Permissible Cable Length Between Transducer and Counter:	65 ft.

Readout

Display:	7 segments.
Reset:	Manual and external input.
Preset:	Manual and external input.
Counter Input:	For two 90 degree phase shifted photo-element signals.
Supply Voltage:	115 VAC 50 Hz.
Power:	~ 20 VA.
Fault Detection Signal:	Output signal available.
Readout Units:	Inch/mm switchable.
Output Signal:	BCD.

Slide

Material:	Aluminum.
Lead Screw:	Type 302 SS 3/8-40.
Motor:	DC motor/generator.
Length (dovetail base):	21 in.
Length (free travel):	18½ in.
Way Covers:	Estane Bellows.
Permissible Ambient Temperature Range:	32°F to 212°F
Permissible Relative Humidity:	$\leq$ 95 percent non-condensing.

8.1.3 Robot Subsystem

The robot is a versatile five axis manipulator with four rotary axes and one linear (telescoping) axis. High performance DC servo motors provide the force used for axis rotation and the telescoping action. The robot is constructed from aircraft aluminum for high strength and light weight. Robot components are replacable as modular units for ease of System expansion and servicing.

The robot controller (part of the robot package) will interface with and be commanded by the main computer. By itself, the controller is capable of storing 256 different robot programs. However in the MAG System, long term program storage will be handled by the main computer. Battery back-up in the controller prevents the current program from being lost in the event of power failure. Control features such as speed and time delay settings for each step and combination of straight-line, point-to-point, and continuous path motion furnish flexibility. The controller will contain a buffered I/O module so that it can interface with the main computer.

The primary method used to teach the robot required movements (at an engineering level) is the teach pendant. Simple pushbutton controls allow the operator to move the arm, teach new tasks, and modify old tasks. An integral digital display panel continually informs the operator of system status messages.

Programming skills are not required to teach the robot new routines.

Technical specification of the robot system follow:

General

5 Degrees of Freedom: 4 Rotary, 1 Linear
Electric Drive
Microcomputer Control
Pushbutton Teaching
24 Opto-Isolated I/O Lines
Pneumatic Gripper Control
Ceiling Mounting Capability
8K Memory Standard (320 Steps)

Performance

Maximum Load: 5 lbs.

Repeatability: ±.004 in.

The maximum no-load speeds are:

Joint 1 Base 1.5 rad/sec. (86°/sec.).

Joint 2 Shoulder 1.5 rad/sec.(86°/sec.).

Joint 3 Arm Linear 35 in/sec. (1.0 m/sec.).

Joint 4 Wrist Pitch 3 rad/sec. (172°/sec.).

Joint 5 Wrist Roll 2 rad/sec. (115°/sec.).

Control Features

Memory Storage for Programs

Speed Setting

Speed Scaling

Time-delay Setting

Straight-line Motion

Point-to-Point Motion

Continuous Path Motion

Conditional/Unconditional Branches

Input Sense and Wait

External Output Control

World, Tool, and Joint Modes

Full Task Editing Using Teach Pendant

Buffered I/O (Opto-isolated Interface)

Environmental

Permissible Ambient Temperature Range: 50°F to 115°F.

Permissible Relative Humidity: $\leq$ 95 percent non-condensing.

Power Requirements

100/117/220/240 VAC, Single Phase 50/60 Hertz, 500 Watts.

Physical

Manipulator:	Weight	100 lbs.
	Mounting	Four 3/8 in. holes. on 7 in. dia. B.C..
Controller:	Weight	50 lbs.
	Mounting	Table Top (Rack Mount Optional)
	Size	17 in. w x 10 in. h. x 22 in. d.
	Cable Length	12 ft.
Teach Pendant:	Weight	2 lbs.
	Size	5 in. w x 8 in. h x 2-3/4¼ in. d.
	Cable Length	12 ft.

8.1.4 Main Computer Subsystem

The Main Computer will coordinate all activities needed to perform the dimensional gauging tasks of the MAG system. It will control the robot, interpret data from the gauging sensors, and perform all operator/engineering interfaces. The main computer will also provide the software development system needed during fabrication of the prototype MAG System.

To perform all of its tasks, the main computer will require a number of I/O functions as well as permanent mass storage capability. The technical details of the main computer system follow.

Main Computer

CPU Card:	RS232 serial port and programmable parallel port Real time clock/calendar with on-board back-up battery 64K bytes DRAM and up to 16K bytes EPROM on board Four programmable timers Program controlled MEMEX and IOEXP signals DMA and multi-processing supported Z80 mode 2 interrupt controller

A/D Converter Card:	12-Bit successive approximation conversion 25 microsecond conversion time Input range to ±100 V Demand or continuous conversion selection 16 channels available.
D/A Converter Card:	12-Bit data conversion Up to three channels (fully independent) Bipolar outputs (± 10 volts max.) On-card precision voltage reference Choice of .1 percent or 1 percent accuracy.
Digital I/O Card:	Two independent RS232C compatible channels Full programmable modern control provided On-board interrupt controller Fully software programmable to 19,200 BPS I/O mapped.
CRT Controller Card:	Extensive visual attributes Alphanumeric and block graphics Split screen and horizontal scroll Composite video or separate sync.

Peripherals

Mass Storage:	Sealed hard disk
Printer:	Alphanumeric
Temperature Sensor:	STD bus compatable plug-in
Motor Controller:	STD bus compatable plug-in
Display:	12 in. diagonal CRT

Environmental

Permissible Ambient Temperature Range: 32°F to 122°F.

Permissible Relative Humidity: $\leq$ 95 percent non-condensing.

8.2 System Operation

The MAG System is designed to function at two levels: operating and engineering modes. This section will present details for both modes of operation.

8.2.1 Operator Level

As the name implies, the Operator (OPERATE) level is the one which will be used on a routine basis. At this level the MAG System will function as an automatic dimensional gauging system for pre-programmed parts.

To use the MAG System the operator first moves the system to the location where it will be used. Next, he locks down the cart by using the built-in floor lock brakes, and "plugs in" to appropriate power. Once the system is turned on with a keyswitch, the main computer performs a self-boot routine and initializes the system (sets the reference standard, homes the robot, etc.). After a suitable warm-up period the operator is notified that the system is ready via a message on the CRT. At this time, the operator loads the part to be gauged onto the MAG System.

After acknowledgement by the operator, the system will present a list of currently available part names and numbers which can be gauged. The operator selects the desired part from the list via a keypad. Once the main computer knows which part has been selected, it downloads the robot movement program from mass storage to the robot computer and retrieves tolerance information for the part.

The main computer now performs two safety checks; it asks the operator if he is sure of his selection; if the answer is No the program returns to the start, if the answer is Yes the program proceeds to the next step. The operator is asked if the part is in its proper position for gauging and waits for an answer. If the answer is No the program returns to start, if Yes it proceeds to the next step.

The main computer commands the robot to move the gauging head to the first position and sets the sensor rods to the proper configuration. The output from the sensor rods is read and recorded, if more of the same size measurements are to be made, the System reads and records them.

Next, the gauging head is moved to the reference standard where the main computer compares the recorded value from a measurement to the output signal from the gauging head while the reference standard is moving. When the two signals match, the dimension from the Heidenhain is read and recorded for that measurement. After the dimension is recorded, temperature correction is performed, if required.

If additional measurements are to be performed on the part, the process is repeated as many times as necessary. Once all measurements have been made on the part, the results of the inspections are presented on the CRT (with printout optional). A conceptual screen presentation is shown in Figure 8.7.

If more of the same type of part will be gauged, the System returns to the part of the program which waits until the operator positions the new part on the MAG System.

A flowchart of the OPERATE mode is shown in Figure 8.8, the actual flowchart used for the prototype system will be modified so that the measured dimension is transferred to the Heidenhain reference standard after each measurement.

MODE: OPERATE

ITEM: CRANKSHAFT ASSEMBLY, ENGINE PART NO. 5198562 (72582)

DMWR REF.	CHARACTERISTIC	PLACE	DIMENSION REQUISITE	DIMENSION ACTUAL	IN/OUT
A	Diameter	Front	3.5000/3.4990	3.4992	I
		Intermediate	3.5000/3.4990	3.4997	I
		Intermediate	3.5000/3.4990	3.4991	I
		Rear	3.5000/3.4990	3.5002	O
B	Diameter	Front	2.7500/2.7490	2.7498	I
		Intermediate	2.7500/2.7490	2.7496	I
		Rear	2.7500/2.7490	2.7490	I

1 Continue 2 Hardcopy 3 Return to Start

Figure 8.7 EXAMPLE OF DATA PRESENTATION

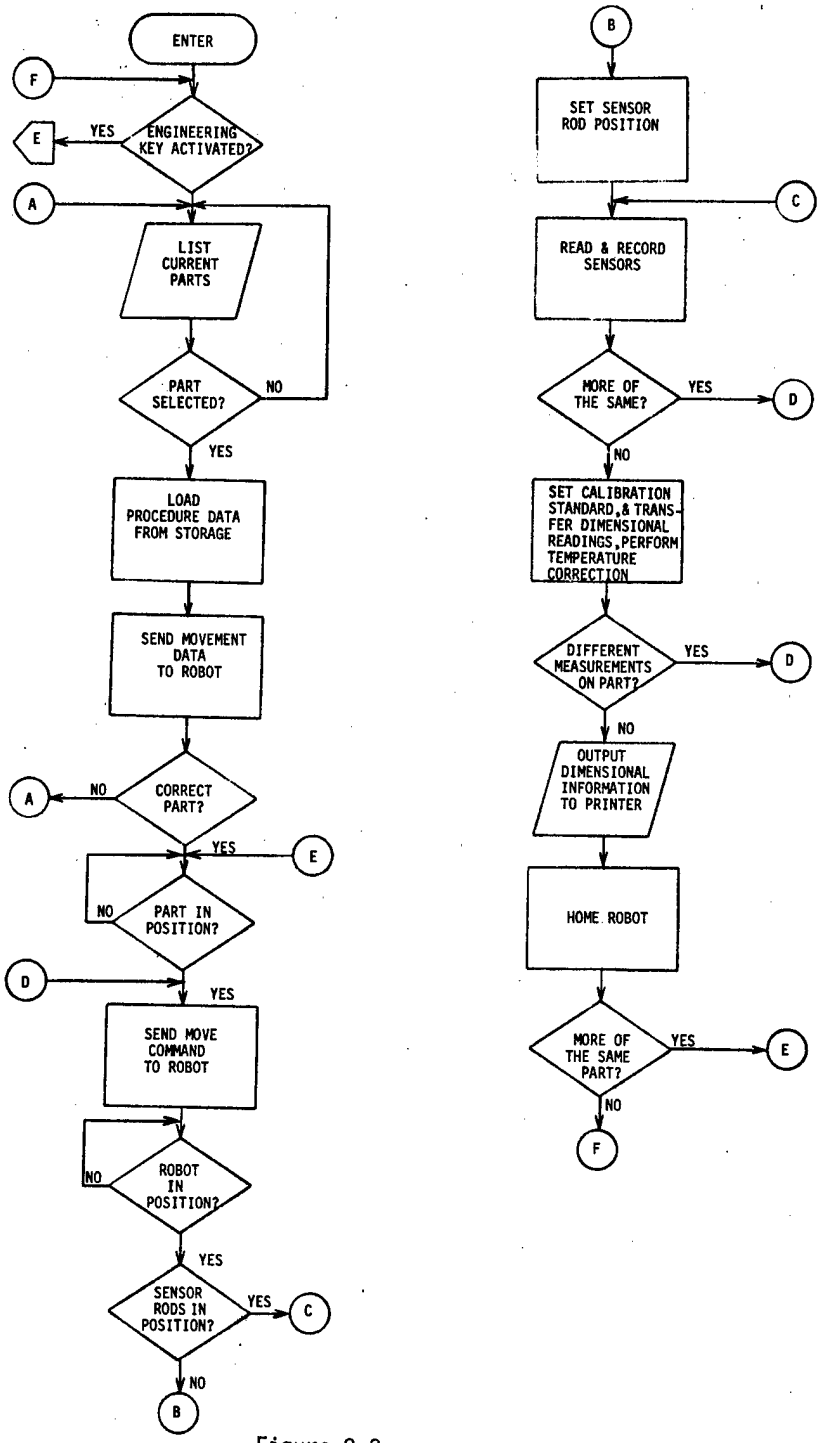

Figure 8.8 OPERATE Mode Flowchart

8.2.2 Engineering Level

The engineering level mode of operation of the MAG System is not normally available for use by operating personnel. With the MAG System in this mode of operation, new robot procedures can be taught, tolerances can be changed, inspection procedures can be deleted, and current procedures modified. Because of this, the System will not enter the engineering mode of operation unless the proper key switch is activated.

The engineering mode offers six (6) sub-modes of operation. They are: Add a new part, Modify existing part information, Delete a current part, List current parts, List All data for current parts, and exit. Each one of these sub-modes of operation is available from a list which is presented on the CRT screen. The following paragraphs describe in detail each sub-mode of operation.

When engineering personnel want to Add a new part inspection to the MAG System the program will first prompt for the name of the part (such as piston, block, etc.). Next, the number and the type of each measurement (such as I.D., O.D., depth) is input. The system will then prompt entry of the tolerances for each of the measurements. Once all the information has been input via the keyboard, the program will present the information on the CRT and ask if there are any corrections. If there are corrections to be made, the program allows those corrections before proceeding. If not, it saves the data that was input. Next, a representative part is placed on the MAG System. The MAG System then enters the robot movement teaching mode, which activates the teach pendant, which is used to move the robot and its gauging head. The robot movements are

directed and modified at this time until the correct gauging motion is developed. Once the operator notifies the MAG System that he is finished teaching the robot, the System stores all the necessary movement data for that part and returns the robot to the home position.

To Modify current part data, such as name or tolerances, the main program prompts the operator for the name or number of the part. The main computer then retrieves current data regarding that part and shows it on the CRT. At this time the operator makes necessary changes. When finished, the program returns to the beginning of the engineering mode.

To Delete a current part the main program prompts for the name or number of that part and then presents the current information. The operator is asked if he is sure that he wants to delete this information. If the response is no, then the program returns to the beginning of the engineering mode; if the response is yes, all information relating to this part is erased.

The List submode simply lists to the CRT or printer the names and numbers of all the currently available parts. The List All submode will list all part names and numbers and associated information (such as tolerances) to either the CRT or printer.

The last submode is Exit, which is available at any time, and simply returns the program to the beginning of the engineering mode.

Flowcharts of these submodes of the engineering level are shown in Figure 8.9.

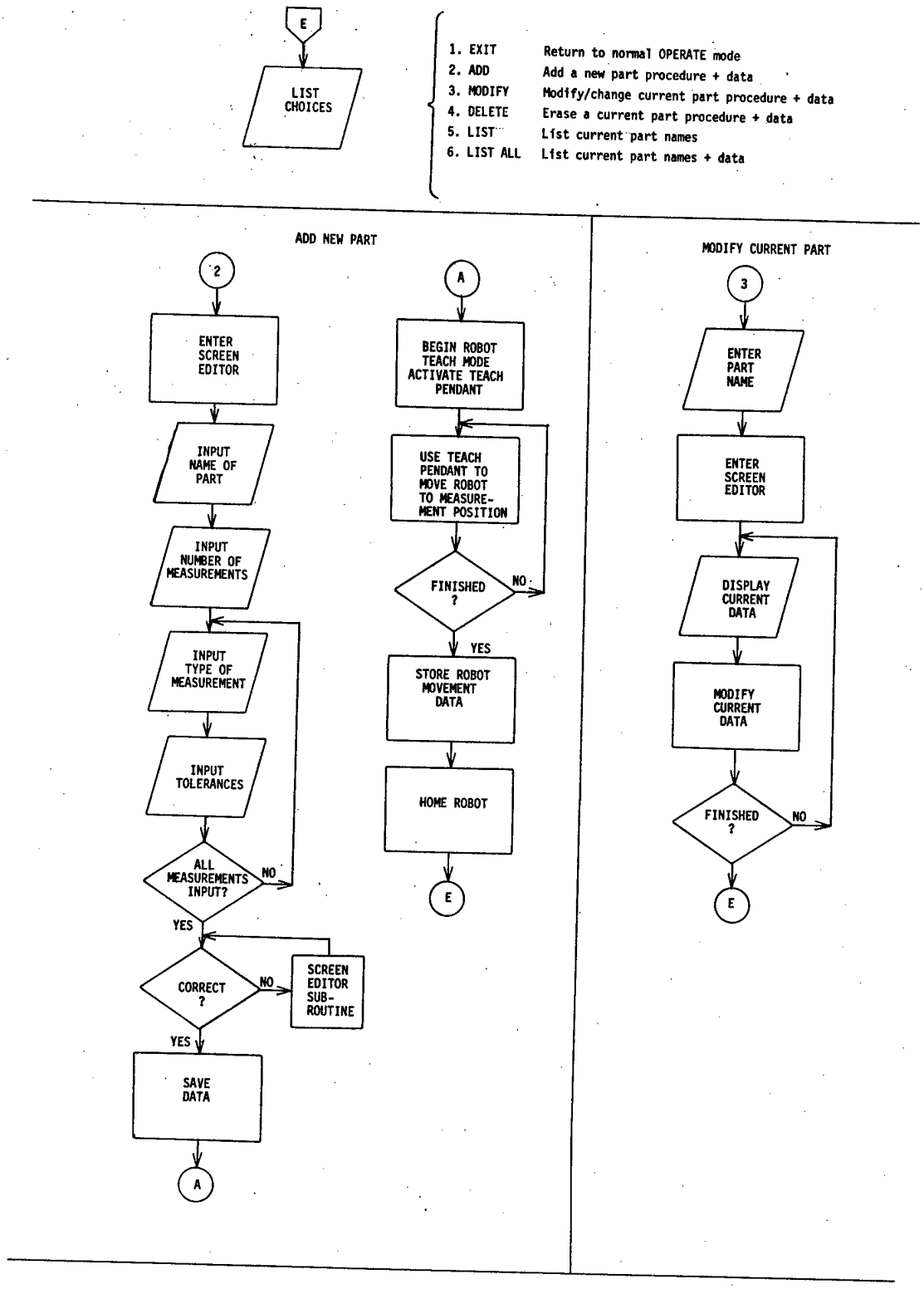

Figure 8.9 ENGINEERING MODE FLOWCHART

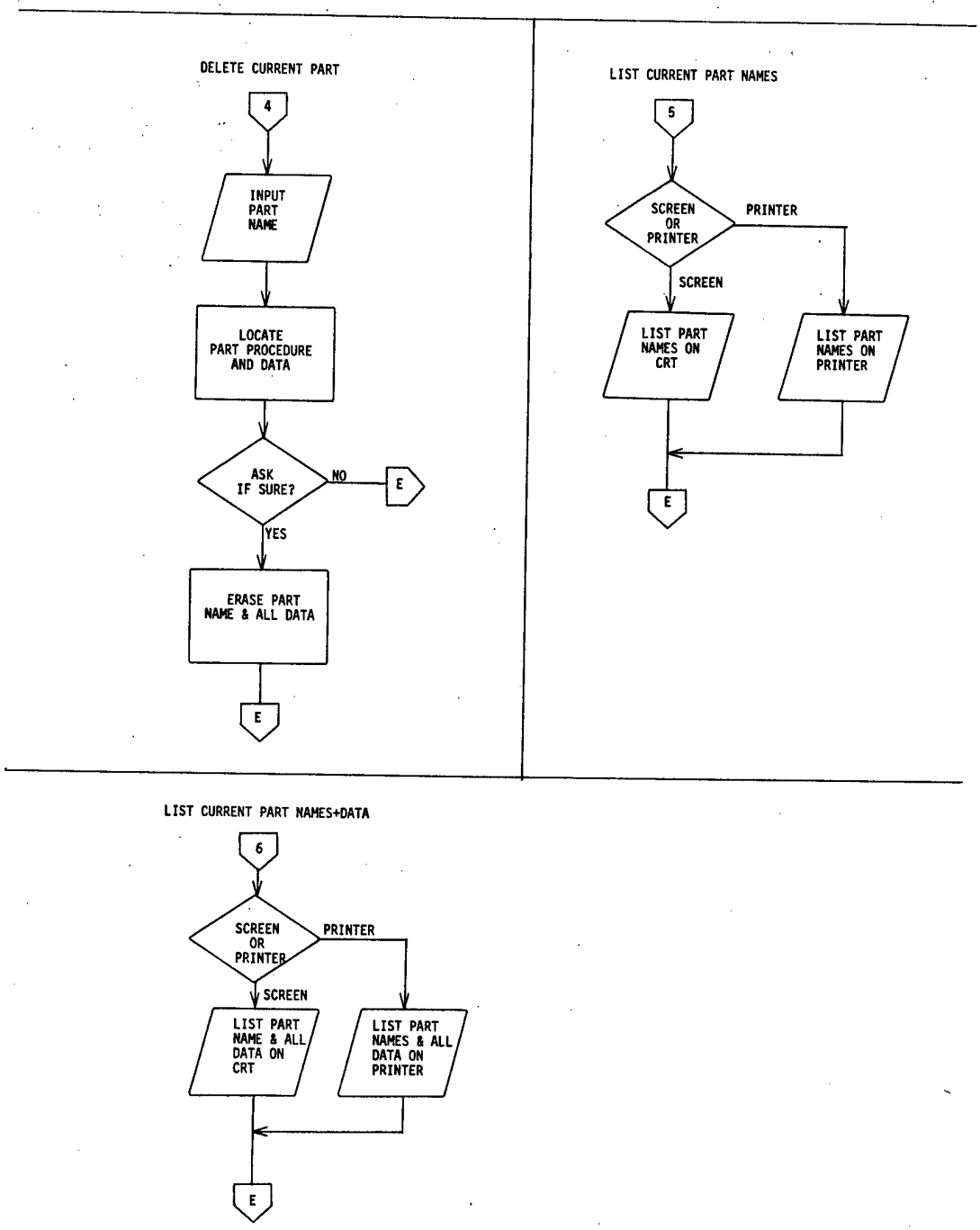

Figure 8.9 (continued)

8.3 System Capabilities

This section ties together the subsystems previously described and presents the intended capabilities of the prototype MAG system. These capabilities are based upon engineering evaluations and determinations performed during this phase of the project, and the capabilities of the subsystems.

Environmental

Permissible Operating Temperature Range: 50°F to 110°F.

Permissible Relative Humidity: $\leq$ 95 percent non-condensing.

Measurement Range

Inside Diameter Measurements:	∿ 0.5 in. to ∿ 10 in.
Outside Diameter Range:	∿ 0.125 in. to ∿ 9.5 in.
Depth/Thickness Range:	0 in. to ∿ 5 in.
Runout:	0 in. to ∿ 0.0500 in.
Taper:	(calculated from I.D./O.D.)
Roundness:	(calculated from I.D./O.D.)
Flatness:	0.0001 in. to 0.0500 in. (dependent upon reference).
Backlash:	0.0000 in. to 0.050 in.
Measurement Accuracy	0.0001 in.
Measurement Resolution	0.00002 in.

Applicable Measurements

A listing of the measurements which the prototype MAG system is intended to perform is shown in Table 8.1. The majority (60 of 62) of the remaining measurements supplied as Contract Appendicies A and B are visual

Table 8.1 Applicable Measurements

Record No.	Apdix.	Characteristic	Item	Method of Inspection	Insp. Req. Min	Insp.Req. Max	DMWR unit inspection time (min)
186	A	End Play	Assembly of Engine	Dial Indicator	.004	.011	6.00
187	A	Depth	Assembly of Engine	Depth Gauge	.0465	.0500	2.33
189	A	Backlash	Assembly of Engine	Dial Indicator	.003	.007	6.00
190	A	Depth	Assembly of Engine	Dial Indicator		.013	8.00
191	A	Backlash	Assembly of Engine	Dial Indicator		.007	6.00
230	B	Diameter	Arm Assm,Valve Rkr	Dial Bore Gauge	.8753	.8763	5.04
231	B	Diameter	Arm Assm,Valve Rkr	Dial Bore Gauge	.8753	.8763	5.04
238	B	Diameter	Arm Assm.	Dial Bore Gauge	.8750	.8760	5.08
254	B	Diameter	Armature,Starter	Dial Snap Gauge	.5590	.5610	2.50
255	B	Diameter	Armature,Starter	Dial Snap Gauge	.8225	.8240	2.50
256	B	Diameter	Armature,Starter	Dial Snap Gauge	.6170	.6230	2.50
257	B	Diameter	Armature,Starter	Snap Gauge		2.1930	2.50
258	B	Depth	Armature,Starter	Depth Gauge	.025	.032	5.28
259	B	Runout	Armature,Starter	Surf Plate&V-Block		.0020	7.06
2	A	Flatness	Block Assm.	Strtedge&Feeler		.0030	2.00
3	A	Flatness	Block Assm.	Strtedge&Feeler		.0060	2.00
4	A	Diameter	Block Assm.	Dial Bore Gauge		4.5235	1.90
5	A	Diameter	Block Assm.	Dial Bore Gauge		4.4900	1.90
6	A	Diameter	Block Assm.	Dial Bore Gauge		4.3595	1.90
7	A	Taper of Bore	Block Assm.	Dial Bore Gauge		.0015	1.79
8	A	Roundness of Bore	Block Assm.	Dial Bore Gauge		.0015	1.79
9	A	Diameter	Block Assm.	Dial Bore Gauge	3.7510	3.7520	2.60
10	A	Diameter	Block Assm.	Dial Bore Gauge		2.3750	2.05
11	A	Diameter	Block Assm.	Dial Bore Gauge		2.3650	2.05
12	A	Flatness of C'Bore	Block Assm.	Depth Bore Gauge		.0010	2.74
13	A	Depth of C'Bore	Block Assm.	Depth Gauge	.3000	.3020	2.74
14	A	Diameter of C'Bore	Block Assm.	Dial Bore Gauge	4.8200	4.8350	2.74
15	A	Diameter	Block Assm.	Dial Bore Gauge	2.1870	2.1889	2.05
208	B	Diameter	Bearing Sleeve	Dial Bore Gauge	1.3760	1.3765	5.03
248	B	Diameter	Bushing,Sleeve	Dial Bore Gauge	.6240	.6260	5.42
249	B	Diameter	Bushing,Sleeve	Dial Snap Gauge	.7570	.7550	2.92
275	B	Diameter	Bushing,Bearing	Dial Bore Gauge	.8335	.8355	3.00
276	B	Diameter	Bushing,Bearing	Dial Snap Gauge	.9630	.9650	2.50
16	A	Diameter	Crankshaft Assm.	Micrometer	3.489	3.490	1.00
17	A	Diameter	Crankshaft Assm.	Micrometer	2.739	2.740	1.00
18	A	Roundness	Crankshaft Assm.	Micrometer		.00025	1.00
19	A	Taper	Crankshaft Assm.	Micrometer		.0005	1.00
20	A	Runout	Crankshaft Assm.	Surf Plat&V-Block		.0030	4.33
22	A	Diameter	Crankshaft Assm.	Micrometer	4.0600	4.0610	1.00
44	A	Diameter	Camshaft Assm,Left	Micrometer	2.1820	2.1825	4.00
45	A	Diameter	Camshaft Assm,Left	Micrometer	1.1875	1.1880	16.00
46	A	Runout	Camshaft Assm,Left	Vee Block,Surf Plt		.0020	11.91
49	A	Diameter	Camshaft Assm,Rght	Micrometer	2.1820	2.1825	4.00
50	A	Diameter	Camshaft Assm,Rght	Micrometer	1.1875	1.1880	16.00
51	A	Runout	Camshaft Assm,Rght	Surf Plate&V-Block		.0020	11.91
55	A	Flatness	Cylinder Head Assm	Strghtedge&Feeler		.0040	2.00
56	A	Flatness	Cylinder Head Assm	Strghtedge&Feeler		.0050	2.00
57	A	Diameter of C'Bore	Cylinder Head Assm	Dial Bore Gauge	1.1590	1.1600	2.02
58	A	Diameter of CamFol	Cylinder Head Assm	Plug Gauge	1.0626	1.0670	2.03
60	A	Thickness	Cylinder Head Assm	Micrometer		4.3760	2.00
265	B	Diameter	Drive,StarterPin.	Dial Bore Gauge	.6245	.6250	2.92
223	B	Diameter	Exhaust Valve	Dial Snap Gauge	.2480	.2488	5.00

Table 8.1 (continued)

Record No.	Apdix.	Characteristic	Item	Method of Inspection	Insp. Req. Min	Insp.Req. Max	DMWR unit inspection time (min)
226	B	Thickness	Exhaust Valve	Scale		.031	5.02
218	B	Diameter	Follower Assm.	Dial Snap Gauge	1.0600	1.0610	5.00
219	B	Diameter	Follower Assm.	Dial Snap Gauge	.9070	.9020	5.00
220	B	DiametricClearance	Follower Assm.	Feeler Gauge	.0013	.0021	2.00
221	B	Clearance, Side	Follower Assm.	Feeler Gauge	.0110	.0230	2.00
251	B	Diameter	Frame Assm,ComEnd	Dial Bore Gauge	.5625	.5635	5.50
195	B	Diameter	Gear,Timing,C'Snft	Dial Bore Gauge	4.0580	4.0590	5.42
199	B	Diameter	GearAssm,Idler	Dial Bore Gauge	2.1860	2.1870	5.40
210	B	Diameter	GearHelical,C'Sft	Dial Bore Gauge	1.1865	1.1875	5.40
211	B	Diameter	GearHelical,C'Sft	Dial Bore Gauge	1.1865	1.1875	5.40
228	B	Diameter	Guide,Poppet Valve	Dial Bore Gauge	.2505	.2515	5.02
241	B	Diameter	GearAssm,FuelPump	Dial Bore Gauge	1.122	1.123	5.46
285	B	Diameter	Gear,Helix,BlDr	Dial Snap Gauge	1.3995	1.4005	2.95
203	B	Diameter	Hub,Idler Gear	Dial Snap Gauge	2.1825	2.1835	5.00
244	B	Diameter	Hub,Fuel Pump	Dial Snap Gauge	1.1200	1.1205	5.00
247	B	Diameter	Housing,Starter	Dial Bore Gauge	.7490	.7500	3.00
281	B	Diameter	Hub,BlowerDrGear	Dial Bore Gauge	1.4010	1.4015	2.50
270	B	Diameter	LeverAssm,Starter	Plug Gauge	.5100	.5120	2.50
31	A	Diameter	Piston Assm	Micrometer	3.8699	3.8721	1.60
32	A	Diameter	Piston Assm	Dial Snap Gauge	1.3775	1.3780	1.68
207	B	Diameter	Pin,Piston	Dial Snap Gauge	1.3746	1.3750	2.00
26	A	Diameter	Rod Assm,Piston	Dial Bore Gauge	1.6000	1.6010	1.34
27	A	Diameter	Rod Assm,Piston	Dial Bore Gauge	3.0015	3.0025	1.34
28	A	Length	Rod Assm,Piston	Surface Plate	8.8990	8.7010	4.43
30	A	Straightness	Rod Assm,Piston	Surface Plate		.005	4.43
38	A	Diameter	Sleeve,Cyl.Liner	Micrometer	4.4850	4.4860	2.00
39	A	Diameter	Sleeve,Cyl.Liner	Dial Bore Gauge		3.8797	2.02
40	A	Roundness	Sleeve,Cyl.Liner	Dial Bore Gauge		.003	3.02
41	A	Taper	Sleeve,Cyl.Liner	Dial Bore Gauge		.002	3.02
236	B	Diameter	ShaftAssm,RkrArm	Dial Snap Gauge	.8735	.8740	5.00
273	B	Diameter	Shaft,ShiftLever	Dial Snap Gauge	.4980	.5000	2.50
280	B	Diameter	Support,BlowerDr.	Dial Bore Gauge	1.4050	1.4060	5.42
197	B	Thickness	WasherThrust,C'Sft	Dial Snap Gauge	.119	.122	2.00
205	B	Thickness	WasherThrust,Idler	Dial Snap Gauge	.1180	.1200	3.00
216	B	Thickness	Washer,Thrust	Dial Snap Gauge	.2080	.2100	2.50
245	B	Thickness	Washer,Thrust	Snap Gauge		.156	5.00
263	B	Thickness	Washer,StarterArm.	Dial Snap Gauge	.0570	.0670	2.50
268	B	Thickness	Washer,StarterPin.	Snap Gauge	.1800	.1960	2.50
286	B	Thickness	Washer,Thrust,BlDr	Dial Snap Gauge	.093	.103	2.50

RECORDS SELECTED 91

inspection and as such will not be addressed by the MAG system and are not listed in this report. For each item listed in Table 8.1, information is included regarding the characteristic being measured, the current method of inspection, the required tolerances, and the amount of DMWR unit time allowed to perform each measurement. The data used to calculate the unit inspection time was supplied by RRAD. The formula used is shown below:

$$\text{DMWR unit inspection time} = \frac{(\text{groups per set up})(\text{performance time})+(\text{set up time})}{(\text{tests performed})(\text{groups per set up})}$$

Inspection Time

The measurement speed of the prototype MAG system is primarily dependent upon how quickly the robot arm can move the gauging head to the proper position on an item. Since the MAG system does not yet exist, estimates were made based upon the following values:

- Robot movement speed - 5 in./1 sec.(derated from manufacturers' published maximum speed ∿ 30 in./sec.)
- "Settling" time (time allowed for mechanical settling of gauge head after placement) = 2 sec.
- Measurement transfer time (average time needed to return gauging head to Heidenhain and transfer measurement) = 5 sec.

In order to compare current inspection time with MAG system inspection time the times to perform applicable measurements of two items (the 6V53 engine block and a piston) were compared.

The applicable engine block measurements include: 2 transverse flatness, 2 longitudinal flatness, 6 top of bore diameter, 6 center bore

diameter, 6 bottom of bore diameter, 18 taper of bore, 18 roundness of bore, 4 crankshaft bearing housing diameters, 4 end bearing bore diameters, 4 intermediate bearing bore diameters, 6 flatness of counterbore, 6 depth of counterbore, 6 diameter of counterbore, and 18 diameters of cam bearing. The total manual DMWR inspection time (Table 8.1) for measuring all applicable items on the block is 189 minutes (3 hours and 9 minutes). However it is possible that the roundness and taper measurements of the cylinder bore could be performed at the same time as the diameter measurements which would reduce the total time by 64 minutes giving a new total time of 125 minutes (2 hours and 4 minutes).

To calculate the time required by the MAG system to perform the above measurements, a scale drawing was used and the total movement of the gauging head (in inches) was measured and found to be $\sim$ 600 in.

Using a speed of 5 in./sec., the total movement time then equals $\sim$ 2 minutes. The total time to transfer the 60 measurements equals $\sim$ 5 minutes. The total settling time for the 60 measurements equals $\sim$ 2 minutes. The total inspection time is then $\sim$ 10 minutes. Allowing a safety factor of 5, the total measurement time is $\sim$ 50 minutes.

The comparison between current inspection time and expected MAG system inspection is 125 minutes versus 50 minutes (with a 5X safety factor).

This comparison process was repeated for the applicable measurements on a piston. The results showed a DMWR inspection time of $\sim$ 300 seconds (5 minutes) versus an estimated MAG system time of 135 seconds (with a 5X safety factor).

The results of these measurement speed comparison provide confidence in the ability of the MAG system to reduce the current DMWR inspection times by 50 percent or more.

8.4 Discussion

System part holding fixtures are designed to mechanically provide exact and repeatable part placement relative to a selected datum point on the part. This fixturing approach allows us to provide a system without the added complexity of a part presence/orientation detection/compensation capability, and to eliminate potential measurement inaccuracy contributions from the resultant correction requirements.

The design assumes the loci of the various measurements to be made on complex parts do not vary from part to similar part by more than ±0.01 inches. (The reasonableness of this assumption could not be confirmed. Attempts by both the COTR and GARD to get dimensional drawings of the major assemblies of the 6V53 engine from both the manufacturer and RRAD met with failure.) Since this assumption can not be verified, the MAG system will approach each I.D. measurement with the probes moved together in a 'closed' position and approach each O.D. measurement with the probes in the 'open' position. This would provide maximum clearance between the probes and the object to be measured. Each measurement is transferred to the Heidenhain reference standard individually.

The System is designed to repeatably place (±0.004 inches) the gauging probes anywhere with its work volume, which allows measurements to be presented to, and made by, the electronic gauges well within their dimen-

sioning acquisition range of ±0.050 in. They actually leave a measurement readout range of ±0.036 in., without probe motion from a robotically pre-set position. This range well covers dimensionally acceptable tolerances (95 percent less than ±0.002 in. with the largest single one at ±.0075 in.) with a large amount of 'out-of range' (1700 percent in 95 percent of the cases and 380 percent in the worst single case). GARD checked with RRAD regarding the suitability of these out-of-range measurement capabilities. It was determined from this discussion that for almost all items, if the measured dimension was greater than 10 percent over/under tolerance, the item could not be reworked and there was no need for an exact measurement. With this in mind, the 380 percent (minimum) out-of-range capability appears to be more than adequate.

Current plans are that the dimensional measurements within these pre-set acquisition ranges will be displayed to the operator (along with an accept/reject indication); readings outside this range will be shown as out-of-range HI or LOW.

Preliminary discussion about safety with regards to the MAG system operation at RRAD have shown that to the best of RRAD's knowledge at this time no special precautions are necessary. However this issue will be further investigated during the second Phase of this project.

APPENDIX A

IMPLEMENTATION PRIORITIZATION DATA (IPD)

AS SUPPLIED BY RED RIVER ARMY DEPOT

ITEM: Block Assembly - Engine (6V53) PART NO.: 5197164 (72582)

DATE: 4 Apr 83 BY: John Kirkland FROM: SDSRR-QA REF: DMWR 9-2815-205

APPENDIX: A

REF	CHARACTERISTIC	DEFECT	METHOD OF INSPECTION	INSPECTION REQUISITE		COMPLEXITY/ SKILL LEVEL (1-5)/(1-3)	ERROR PROBABILITY (# Out of Tol. / # Checked)	TESTS PERFORMED	TIME/MANUAL TIME (For Test Group)	GROUPS PER SET-UP	FABRICATION CRITICALITY (1-3)	PERFORMANCE CRITICALITY (1-3)
A	Leakage - Performed only if repaired or failure at Dynamometer relating to this check.	Major	Cylinder Block Pressure Test		No Leakage at 60	5/3	0/2	1	2.5hrs	1	3	3
B	Flatness (Top of block transversely)	Major	Straightedge & Feeler Gage		0.0030 Max	3/3	1/216	2	4 min.	6	2	2
C	Flatness (Top of block Longitudinally)	Major	Straightedge & Feeler Gage		0.0060 Max	3/3	1/216	2	4 min.	6	2	2
D	Diameter (Top of bore)	Major	Dial Bore Gage		4.5235 Max	4/3	3/648	6	10.57 min.	6	3	3
E	Diameter (Center of bore)	Major	Dial Bore Gage		4.4900 Max	4/3	2/648	6	10.57 min.	6	3	3
F	Diameter (Bottom of bore)	Major	Dial Bore Gage		4.3595 Max	4/3	2/648	6	10.57 min.	6	3	3
G	Taper of Bore	Major	Dial Bore Gage		0.0015 Max	5/3	3/1944	18	31.7 min.	6	2	2
H	Roundness of Bore	Major	Dial Bore Gage		0.0015 Max	4/3	3/1944	18	31.7	6	3	3
J	Diameter	Major	Dial Bore Gage	3.7510	3.7520	4/3	1/432	4	10 min.	6	3	3
K	Diameter (End bearing bore)	Major	Dial Bore Gage		2.3750	3/3	3/432	4	8 min.	6	3	3
L	Diameter (Intermediate bearing bore)	Major	Dial Bore Gage		2.3650	3/3	2/432	4	8 min.	6	3	3
M	Flatness of Counterbore	Major	Depth Bore Gage		0.0010 Max	4/3	3/648	6	16 min.	6	2	2
N	Depth of Counterbore	Minor	Depth Gage	0.3000	0.3020V Max	4/3	5/648	6	16 min.	6	3	3
P	Diameter of Counterbore	Minor	Dial Bore Gage	4.8200	4.8350	4/3	3/648	6	16 min.	6	3	3
Q	I.D. of Cam Bearing		Dial Bore Gage	2.1870	2.1889	4/3	4/864	8	16 min.	6	2	3
			*NOTE: If camshaft bearing bores (characteristic K & are rebored, the following inspection requis			100% Inspection less Reference A.						

ITEM INFORMATION
INSPECTION VOLUME (# Items/ Time)
108/Month
FABRICATION CRITICALITY (Rejects/ Time)
2/Month
PERFORMANCE CRITICALITY (Rejects/ Time)
2/Month
SET-UP TIME (Ref/Time)
A/25 min. B-C/None D/2.5 min. E/2.5 min. F/2/5 min. G-H/2.5 min. J/2.5 min. K-L/2.5 min. M/2.5 min. N/2.5 min. O/2.5 min. P/2.5 min. Q/2.5 min.

IMPLEMENTATION PRIORITIZATION DATA

Contract No. DAAE07-83-C-R014

ITEM: Crankshaft Assembly: Engine

PART NO.: 5198562 (72582)

DATE: 4 Apr 83 BY: John Kirkland FROM: SDSRR-QA

REF: DMWR 9-2815-205

APPENDIX: A

REF	CHARACTERISTIC	DEFECT	METHOD OF INSPECTION	INSPECTION REQUISITE		MEASUREMENT INFORMATION: COMPLEXITY/ SKILL LEVEL (1-5)/(1-3)	ERROR PROBABILITY (# Out of Tol./ # Checked)	TESTS PERFORMED	PERFORMANCE TIME (For Test Group)	GROUPS PER SET-UP	FABRICATION CRITICALITY (1-3)	PERFORMANCE CRITICALITY (1-3)
A	Diameter	Major	Micrometer	3.5000	3.4990	4/3	0/47.2	4	4 min.	3	3	3
B	Diameter	Major	Micrometer	2.7500	2.7490	4/3	1/35.4	3	3 min.	3	3	3
C	Roundness	Major	Micrometer		0.00025 Max	5/3	1/82.6	7	7 min.	3	2	3
D	Taper	Major	Micrometer		0.0030 Max	5/3	1/82.6	7	7 min.	3	2	3
E	Runout of Intermediate main bearing journals to front and rear journals	Major	VEE Blocks, Surface Plate, Indicator and Stand		0.0030 Tir	5/3	0/23.6	2	2 min.	3	3	3
F	Surface Finish	Major	Visual and Profilometer		No ridges exceeding 0.0002	4/3	1/82.6	7	35 min.	3	2	3
G	Diameter	Major	Micrometer	4.0610	4.0600	4/3	0/11.8	1	1 min.	3	2	3
H	Surface condition (thrust surface)	Major	Visual		No surface scoring or excessive wear	3/3	3/94.4	8	8 min.	3	2	3
J	Surface condition(front and rear oil seal surfaces) *90% of Crankshafts are reground.	Minor	Visual		No surface imperfections (ridging or grooving)	3/3	1/23.6	2	2 min.	3	2	3
	NOTE: If crankshaft is reground, the above inspection requisites marked with an * are invalid and the inspection requisites below apply.											
*A	Diameter	Major	Micrometer	3.490 0.010	3.489 undersize	5/3	6/424.8	4	4 min.	5.3	3	3
				3.480 0.020	3.479 undersize							
				3.470 0.030	3.469 undersize		100% Inspection					

Standard Crankshaft

ITEM INFORMATION
INSPECTION VOLUME (# Items/ Time)
11.8/Month
FABRICATION CRITICALITY (Rejects/ Time)
0/Month
PERFORMANCE CRITICALITY (Rejects/ Time)
0/Month
SET-UP TIME (Ref/Time)
A-D/None E/20 min. F/15 min. GHJ/None

IMPLEMENTATION PRIORITIZATION DATA

Contract No. DAAE07-83-C-R014

ITEM: Crankshaft Assembly: Engine

PART NO.: 5198562 (72582)

DATE: 4 Apr 83 BY: John Kirkland FROM: SDSRR-QA

REF: DMWR-9-2815-205

APPENDIX: A

REF	CHARACTERISTIC	DEFECT	METHOD OF INSPECTION	INSPECTION REQUISITE	COMPLEXITY/ SKILL LEVEL (1-5)/(1-3)	ERROR PROBABILITY (# Out of Tol./ # Checked)	TESTS PERFORMED	INSPECTION TIME (For Test Group)	GROUPS PER SET-UP	FABRICATION CRITICALITY (1-3)	PERFORMANCE CRITICALITY (1-3)
*B	Diameter	Major	Micrometer	0.010 undersize 2.740 2.739 0.020 undersize 2.730 2.729 0.030 undersize 2.720 2.719	5/3	3/318.6	3	3 min.	5.3	3	3
*C	Roundness	Major	Micrometer	0.00025 Max	5/3	1/743.4	7	7 min.	5.3	2	3
*D	Taper	Major	Micrometer	0.0005 Max	5/3	2/743.4	7	7 min.	5.3	2	3
*F	Surface Finish	Major	Surface Analyzer	12 RMS Max Rod Journals 10 RMS Max main Journals	4/3	1/424.8	3 4	4 min. 5 min.	5.3 5.3	2 2	3 3
K	Radius	Minor	Radius Gage	0.100 0.130 Radius	5.3	2/1486.8	14	14 min	5.3	2	3

100% Inspection After Regrind.

*Undersize Crankshaft

ITEM INFORMATION
INSPECTION VOLUME (# Items/ Time)
106.2/Month
FABRICATION CRITICALITY (Rejects/ Time)
2/Month
PERFORMANCE CRITICALITY (Rejects/ Time)
3/Month
SET-UP TIME (Ref/Time)
A-D/None F/15 Min. K/5 Min.

IMPLEMENTATION PRIORITIZATION DATA

Contract No. DAAE07-83-C-R014

ITEM: Rod Assembly: Connecting Piston

PART NO.: 5133109 (72582)

DATE: 4 Apr 83 BY: John Kirkland FROM: SDSRR-QA

REF: DMWR 9-2815-205

APPENDIX: A

REF	CHARACTERISTIC	DEFECT	METHOD OF INSPECTION	INSPECTION REQUISITE		COMPLEXITY/ SKILL LEVEL (1-5)/(1-3)	ERROR PROBABILITY (# Out of Tol./ # Checked)	TESTS PERFORMED	PERFORMANCE TIME (For Test Group)	GROUPS PER SET-UP	FABRICATION CRITICALITY (1-3)	PERFORMANCE CRITICALITY (1-3)
A	Diameter	Major	Dial Bore Gage	1.6000	1.6010	4/3	1/132	1	1.332 min.	33	2	3
B	Diameter	Major	Dial Bore Gage	3.0015	3.0025	4/3	1/132	1	1.332	33	2	3
C	Length (center of bore to center of bore)	Major	Surface Plate, angle and dial height gage.	8.8010	8.7990	5/3	1/132	1	4.2 min.	33	2	3
D	Physical Condition		Visual		No cracks allowed	3/3	1/132	1	2.8 min.	33	2	3
E	Straightness		Surface plate or equivalent		Axis of A must be parallel with axis of B within .005 IN. in 6 IN.	5/3	2/132	1	4.2 min.	33	2	3
						Lot sampling - 1 month period.						

ITEM INFORMATION
INSPECTION VOLUME (# Items/ Time)
660/Month
FABRICATION CRITICALITY (Rejects/ Time)
5/Month
PERFORMANCE CRITICALITY (Rejects/ Time)
1/Month
SET-UP TIME (Ref/Time)
A-B/2.5 min. D/None C&E/15 min.

IMPLEMENTATION PRIORITIZATION DATA

Contract No. DAAE07-83-C-R014

ITEM: Piston Assembly: Engine (OV55) PART NO.: 5138000 (72582)

DATE: 4 Apr 83 BY: John Kirkland FROM: SDSRR-QA REF: DMWR9-2815-205

APPENDIX: A

REF	CHARACTERISTIC	DEFECT	METHOD OF INSPECTION	INSPECTION REQUISITE		COMPLEXITY/ SKILL LEVEL (1-5)/(1-3)	ERROR PROBABILITY (# Out of Tol./ # Checked)	TESTS PERFORMED	MEASUREMENT INSPECTION PERFORMANCE TIME (For Test Group)	GROUPS PER SET-UP	FABRICATION CRITICALITY (1-3)	PERFORMANCE CRITICALITY (1-3)
A	Diameter (skirt)	Major	Micrometer	3.8721	3.8699	4/3	1/144	1	.626 min.	36	2	3
B	Diameter of Bushing Bore	Major	Dial Bore Gage	1.3775	1.3780	4/3	3/288	2	.252 min.	36	2	3
C	Surface Condition	Major	Visual using Figure 3-17 as comparison standard		No indications of scoring or burning	3/2	1/144	1	min.	36	2	3
D	Surface Condition	Major	Visual		No burned spots or other indications of overheating	3/2	1/144	1	min.	36	2	3
E	Ring Groove Condition	Minor	Visual & Feeler Gage		No worn or damaged ring grooves	4/2	2/144	1	min.	36	2	3
						Lot sampling - 1 month period						

ITEM INFORMATION
INSPECTION VOLUME (# Items/ Time)
720/Month
FABRICATION CRITICALITY (Rejects/ Time)
2/Month
PERFORMANCE CRITICALITY (Rejects/ Time)
4/Month
SET-UP TIME (Ref/Time)
A,C,D,E/None B/2.5 min.

IMPLEMENTATION PRIORITIZATION DATA

Contract No. DAAE07-83-C-R014

ITEM: Sleeve, Cylinder Liner

PART NO.: 5132803 (72582)

DATE: 4 Apr 83 BY: John Kirkland FROM: SDSRR-QA

REF: DMWR9-2815-205

APPENDIX: A

REF	CHARACTERISTIC	DEFECT	METHOD OF INSPECTION	INSPECTION REQUISITE		MEASUREMENT INFORMATION: COMPLEXITY/ SKILL LEVEL (1-5)/(1-3)	ERROR PROBABILITY (# Out of Tol./ # Checked)	TESTS PERFORMED	PERFORMANCE TIME (For Test Group)	GROUPS PER SET-UP	FABRICATION CRITICALITY (1-3)	PERFORMANCE CRITICALITY (1-3)
A	Diameter	Major	Micrometer	4.4860	4.4850	4/3	1/144	1	2 min.	36	2	3
B	Diameter (installed)	Major	Dial Bore Gage		3.8797 Max	4/3	1/144	1	2 min.	36	2	3
C	Roundness of Bore	Major	Dial Bore Gage		0.003 Max.	4/3	3/144	1	3 min.	36	2	3
D	Taper of Bore	Major	Dial Bore Gage		0.002 Max	4/3	2/144	1	3 min.	36	2	3
E	Surface Condition	Major	Visual		No cracks, scoring, or erosion	3/2	1/144	1	2 min.	36	2	3
F	Surface Condition Below Ports	Major	Visual		No fretting	3/2	1/144	1	2 min.	36	2	3

Lot sampling - 1 month period.

ITEM INFORMATION
INSPECTION VOLUME (# Items/ Time)
720/Month
FABRICATION CRITICALITY (Rejects/ Time)
3/Month
PERFORMANCE CRITICALITY (Rejects/ Time)
2/Month
SET-UP TIME (Ref/Time)
A,E,F/None B,C,D/2.5 min

IMPLEMENTATION PRIORITIZATION DATA

Contract No. DAAE07-83-C-R014

DATE: 4 Apr 83 BY: John Kirkland FROM: SDSRR-QA REF: DMWR 9-2815-205

APPENDIX: A

REF	CHARACTERISTIC	DEFECT	METHOD OF INSPECTION	INSPECTION REQUISITE		COMPLEXITY, SKILL LEVEL (1-5)/(1-3)	ERROR PROBABILITY (# Out of Tol # Checked)	TESTS PERFORMED	PERFORMANCE TIME (For Test Group)	GROUPS PER SET-UP	FABRICATION CRITICALITY (1-3)	PERFORMANCE CRITICALITY (1-3)	ITEM INFORMATION
A	Diameter	Major	Micrometer	2.1825	2.1820	4/3	2/176	4	16 min	11	2	3	INSPECTION VOLUME (# Items/ Time)
B	Diameter	Major	Micrometer	1.1880	1.875	4/3	0/44	1	16 min	11	2	3	
C	Runout of intermediate journals to front and rear journals	Major	VEE Blocks, Surface Plate, Indicator and Stand		0.0020 TIR	4/3	0/88	2	22 min	11	3	3	220/Month
D	Surface Condition (thrust,cam, and journal surfaces)	Major	Visual		No surface scratches, pitting, scoring,or excessive wear	3/3	5/616	14	15 min	11	2	3	FABRICATION CRITICALITY (Rejects/ Time)
	Camshaft regrinding not performed.												3/Month
	NOTE: If camshaft is reground, the following inspection requisite applies:												PERFORMANCE CRITICALITY (Rejects/ Time)
E	Surface Finish	Major	Visual		10 RMS Max			4					0/Month
*A	Diameter	Major	Dial Snap Gage	2.1620	2.1625			4					SET-UP TIME (Ref/Time)
													A,B,D/None C/20 min.
						Lot sampling - 1 month period.							

IMPLEMENTATION PRIORITIZATION DATA

Contract No. DAAE07-83-C-R014

GARDNER

ITEM: Cylinder Head Assembly, Engine Block

PART NO.: 5198203 (72582)

DATE: 4 Apr 83 BY: John Kirkland FROM: SDSRR-QA

REF: DMWR 9-2815-205

APPENDIX: A

REF	CHARACTERISTIC	DEFECT	METHOD OF INSPECTION	INSPECTION REQUISITE		MEASUREMENT INFORMATION: COMPLEXITY/ SKILL LEVEL (1-5)/(1-3)	ERROR PROBABILITY (# Out of Tol./ # Checked)	TESTS PERFORMED	PERFORMANCE TIME (For Test Group)	GROUPS PER SET-UP	FABRICATION CRITICALITY (1-3)	PERFORMANCE CRITICALITY (1-3)
A	Leakage	Major	Cylinder Heat Pressure Test as specified in TM 9-2815-205-34		No Leakage at 60 PSIG	5/3	0/22	1	35 min	11	1	3
B	Flatness (bottom face of head transversely)	Major	Straightedge and feeler gage. Check at each end and between all cylinders		0.0040 Max	3/3	3/1320	6	12 min	11	1	3
C	Flatness (bottom face of head longitudinally)	Major	Straightedge and feeler gage Check 6 places		0.0050 Max	3/3	2/1320	6	12 min	11	1	3
D	Diameter of Counterbore	Major	Dial Bore Gage	1.1590	1.1600	4/3	3/2640	12	24 min	11	3	3
E	Diameter of Cam Follower Bore	Major	Dial Plug Gage	1.0626	1.0670	4/3	4/1980	9	18 min	11	3	3
F	Surface Condition	Major	Visual		No surface scratches or scoring. Micro finish shall not exceed 150	3/3	5/1980	9	18 min	11	1	3
G	Thickness of Head	Major	Micrometer		4.3760 Min	4/3	4/220	1	2 min	11	1	3

100% Inspection for 1 Month Period Less Reference A

ITEM INFORMATION
INSPECTION VOLUME (# Items/ Time)
220/Month
FABRICATION CRITICALITY (Rejects/ Time)
3/Month
PERFORMANCE CRITICALITY (Rejects/ Time)
4/Month
SET-UP TIME (Ref/Time)
A/20 min. B,C,F,G/None D/2.5 min. E/2.5 min.

IMPLEMENTATION PRIORITIZATION DATA

Contract No. DAAE07-83-C-R014

ITEM: Assembly of Engine

PART NO.: 6V53

DATE: 4 Apr 83 BY: John Kirkland FROM: SDSRR-QA

REF: DMWR 9-2815-205

APPENDIX: A

REF	CHARACTERISTIC	DEFECT	METHOD OF INSPECTION	INSPECTION REQUISITE		COMPLEXITY/ SKILL LEVEL (1-5)/(1-3)	ERROR PROBABILITY (# Out of Tol./ # Checked)	TESTS PERFORMED	PERFORMANCE TIME (For Test Group)	GROUP'S PER SET-UP	FABRICATION CRITICALITY (1-3)	PERFORMANCE CRITICALITY (1-3)
3-74b	Fit	Major	Micrometer & Dial Bore Gage	.0045	.0080	5/3	5/352	16	25 min	6	2	3
3-75d	1. End play 2. End play	Major	Dial Indicator	.004	.011 .018	3/3	0/22	1	3 min	1	2	3
3-76b	Depth	Major	Depth Gage	.0465	.0500	4/3	1/132	6	12 min	1	2	3
3-78a	Fit -These measurements are made with Ref. 3-74b above.	Major	Micrometer & Dial Bore Gage	.0045	.0080							
3-80b	Backlash	Major	Dial Indicator	.003	.007	3/2	0/22	1	3 min	1	2	3
3-80c	4 Concentricity	Major	Dial Indicator		.013	4/2	1/22	1	5 min	1	2	3
3-91c	1 Backlash	Major	Dial Indicator		.007	3/2	1/22	1	3 min	1	2	3
3-91c	2 Backlash	Major	Dial Indicator	.003	.005							

ITEM INFORMATION
INSPECTION VOLUME (# Items/ Time)
110/Month
FABRICATION CRITICALITY (Rejects/ Time)
3/Month
PERFORMANCE CRITICALITY (Rejects/ Time)
1/Month
SET-UP TIME (Ref/Time)
3-74b/2.5 min 3.75d/3 min. 3.76b/2 min. 3-80b/3 min. 3-84c/3 min. 3-91c/3 min.

IMPLEMENTATION PRIORITIZATION DATA

Contract No. DAAE07-83-C-R014

ITEM: Gear, Helical, Timing, Crankshaft

PART NO.: 5116195 (72582)

DATE: 18 Apr 83 BY: John Kirkland FROM: SDSRR-QA

REF: DMWR 9-2815-205

APPENDIX: B

CHARACTERISTIC	DEFECT	METHOD OF INSPECTION	INSPECTION REQUISITE		MEASUREMENT INFORMATION: COMPLEXITY/ SKILL LEVEL (1-5)/(1-3)	ERROR PROBABILITY (# Out of Tol./ # Checked)	TESTS PERFORMED	PERFORMANCE TIME (For Test Group)	GROUPS PER SET-UP	FABRICATION CRITICALITY (1-3)	PERFORMANCE CRITICALITY (1-3)
Diameter	Major	Dial Bore Gage	4.0580	4.0590	3/2	0/24	1	5 min 2.5	6	2	3
Gear Teeth Condition	Major	Visual			2/2	0/24	1	4 min	6	2	3

Lot Sampling - 1 month period.

ITEM INFORMATION
INSPECTION VOLUME (# Items/ Time)
120/1 month
FABRICATION CRITICALITY (Rejects/ Time)
0/month
PERFORMANCE CRITICALITY (Rejects/ Time)
0/month
SET-UP TIME (Ref/Time)
A/2.5 min. b/none

ITEM: Washer, Thrust: Crankshaft Main bearing, Standard

PART NO.: 5159353 (72582)

DATE: 18 Apr 83 BY: John Kirkland FROM: SDSRR-QA

REF: DMWR 9-2815-205

APPENDIX: B

REF	CHARACTERISTIC	DEFECT	METHOD OF INSPECTION	INSPECTION REQUISITE		MEASUREMENT INFORMATION: COMPLEXITY/ SKILL LEVEL (1-5)/(1-3)	ERROR PROBABILITY (# Out of Tol./ # Checked)	TESTS PERFORMED	PERFORMANCE TIME (For Test Group)	GROUPS PER SET-UP	FABRICATION CRITICALITY (1-3)	PERFORMANCE CRITICALITY (1-3)
A	Thickness	Major	Micrometer	0.122	0.119	3/2	0/26	1	2 min	6.5	3	3
B	Surface Condition	Major	Visual		No surface scoring	2/1	0/26	1	2 min	6.5	1	3

Lot Sampling - 1 month period.

ITEM INFORMATION	
INSPECTION VOLUME (# Items/ Time)	130/month
FABRICATION CRITICALITY (Rejects/ Time)	0/month
PERFORMANCE CRITICALITY (Rejects/ Time)	0/month
SET-UP TIME (Ref/Time)	A,B/none

IMPLEMENTATION PRIORITIZATION DATA

ITEM: Gear Assembly: Idler

PART NO.: 5135227 (72582)

DATE: 18 Apr 83 BY: John Kirkland FROM: SDSRR-QA

REF: DMWR 9-2815-205

APPENDIX: B

REF	CHARACTERISTIC	DEFECT	METHOD OF INSPECTION	INSPECTION REQUISITE		MEASUREMENT INFORMATION: COMPLEXITY/SKILL LEVEL (1-5)/(1-5)	PROBABILITY (# Out of Tol./# Checked)	TESTS PERFORMED	PERFORMANCE TIME (For Test Group)	GROUPS PER SET-UP	FABRICATION CRITICALITY (1-3)	PERFORMANCE CRITICALITY (1-3)
A	Diameter (bearing)	Major	Dial Bore Gage	2.1860	2.1870	4/3	0/25	1	5 min (2.5)	6.25	2	3
B	Surface Condition(bearing)	Major	Visual		No pitting or scoring	2/1	0/25	1	2 min	6.25	2	2
C	Gear Teeth Condition	Major	Visual		No damaged or worn teeth, no surface pitting or scoring	2/1	0/25	1	2 min	6.25	2	3
D	Surface Condition(thrust both sides)	Major	Visual		No surface scoring	2/1	0/25	1	2 min	6.25	2	2

Lot Sampling - 1 month period.

ITEM INFORMATION
INSPECTION VOLUME (# Items/Time)
125/month
FABRICATION CRITICALITY (Rejects/Time)
0/month
PERFORMANCE CRITICALITY (Rejects/Time)
1/month
SET-UP TIME (Ref/Time)
A/2.5 min B,C,D/none

IMPLEMENTATION PRIORITIZATION DATA

ITEM: Hub: Idler Gear PART NO.: 5124458(72582)

DATE: 18 Apr 83 BY: John Kirkland FROM: RRAD SDSRR-QA REF: DMWR 9-1815-205

APPENDIX: B

REF	CHARACTERISTIC	DEFECT	METHOD OF INSPECTION	INSPECTION REQUISITE		MEASUREMENT INFORMATION: COMPLEXITY/ SKILL LEVEL (1-5)/(1-3)	ERROR PROBABILITY (# Out of Tol./ # Checked)	TESTS PERFORMED	PERFORMANCE TIME (For Test Group)	GROUPS PER SET-UP	FABRICATION CRITICALITY (1-3)	PERFORMANCE CRITICALITY (1-3)
A	Diameter	Major	Micrometer	2.1835	2.1825	4/3	0/25	1	5 min	6.25	2	3
B	Surface Condition	Major	Visual	No pitting	or scoring	2/1	1/25	1	2 min	6.25	1	3
						Lot Sampling - 1 month period						

ITEM INFORMATION	
INSPECTION VOLUME (# Items/ Time)	125/month
FABRICATION CRITICALITY (Rejects/ Time)	0/month
PERFORMANCE CRITICALITY (Rejects/ Time)	1/month
SET-UP TIME (Ref/Time)	A,B/none

IMPLEMENTATION PRIORITIZATION DATA

Contract No. DAAE07-83-C-R014

ITEM: Washer, Thrust: Idler Gear

PART NO.: 5132504(72582)

DATE: 18 Apr 83 BY: John Kirkland FROM: SDSRR-QA

REF: DMWR 9-2815-205

APPENDIX: B

REF	CHARACTERISTIC	DEFECT	METHOD OF INSPECTION	INSPECTION REQUISITE		MEASUREMENT INFORMATION: COMPLEXITY/ SKILL LEVEL (1-5)/(1-3)	ERROR PROBABILITY (# Out of Tol./ # Checked)	TESTS PERFORMED	PERFORMANCE TIME (For Test Group)	GROUPS PER SET-UP	FABRICATION CRITICALITY (1-3)	PERFORMANCE CRITICALITY (1-3)
A	Thickness	Major	Micrometer	0,1200	0.1180	3/2	0/25	1	3 min	6.25	2	3
B	Surface Condition(oil groove side)	Major	Visual	No surface scoring		2/1	0/25	1	2 min	6.25	1	2
						Lot Sampling - 1 month period						

ITEM INFORMATION
INSPECTION VOLUME (# Items/ Time)
125/month
FABRICATION CRITICALITY (Rejects/ Time)
0/month
PERFORMANCE CRITICALITY (Rejects/ Time)
0/month
SET-UP TIME (Ref/Time)
A,B/none

IMPLEMENTATION PRIORITIZATION DATA

Contract No. DAAE07-83-C-R014

ITEM: Pin, Piston

PART NO.: 5116189 (72582)

DATE: 18 Apr 83 BY: John Kirkland FROM: SDSRR-QA

REF: DMWR 9-2815-205

APPENDIX: B

REF	CHARACTERISTIC	DEFECT	METHOD OF INSPECTION	INSPECTION REQUISITE		MEASUREMENT INFORMATION: COMPLEXITY/ SKILL LEVEL (1-5)/(1-3)	ERROR PROBABILITY (# Out of Tol./ # Checked)	TESTS PERFORMED	PERFORMANCE TIME (For Test Group)	GROUPS PER SET-UP	FABRICATION CRITICALITY (1-3)	PERFORMANCE CRITICALITY (1-3)
A	Diameter	Major	Micrometer	1.3750	1.3746	3/3	1/144	1	2 min	36	2	3
						Lot Sampling - 1 month period						

ITEM INFORMATION
INSPECTION VOLUME (# Items/ Time)
720/month
FABRICATION CRITICALITY (Rejects/ Time)
0/month
PERFORMANCE CRITICALITY (Rejects/ Time)
0/month
SET-UP TIME (Ref/Time)
A/none

IMPLEMENTATION PRIORITIZATION DATA

Contract No. DAAF07-83-C-8014

ITEM: Bearing Sleeve: Connecting Rod Piston Pin

PART NO.: 5116181 (72582)

DATE: 18 Apr 83 BY: John Kirkland FROM: SDSRR-QA

REF: DMWR 9-2815-205

APPENDIX: B

REF	CHARACTERISTIC	DEFECT	METHOD OF INSPECTION	INSPECTION REQUISITE		MEASUREMENT INFORMATION: COMPLEXITY/ SKILL LEVEL (1-5)/(1-3)	ERROR PROBABILITY (# Out of Tol./ # Checked)	TESTS PERFORMED	PERFORMANCE TIME (For Test Group)	GROUPS PER SET-UP	FABRICATION CRITICALITY (1-3)	PERFORMANCE CRITICALITY (1-3)
A	Diameter	Major	Dial Bore Gage	1.3760	1.3765	4/3	0/132	1	5 min (2.5)	33	2	3
B	Surface Condition	Major	Visual	No pitting or scoring		2/3	0/132	1	2 min	33	1	3

Lot Sampling - 1 month period

ITEM INFORMATION
INSPECTION VOLUME (# Items/ Time)
660/month
FABRICATION CRITICALITY (Rejects/ Time)
0/month
PERFORMANCE CRITICALITY (Rejects/ Time)
0/month
SET-UP TIME (Ref/Time)
A/2.5 min B/none

IMPLEMENTATION PRIORITIZATION DATA

Contract No. DAAE07-83-C-R014

ITEM: Gear, Helical: Camshaft Left Cyl Bank
Gear, Helical: Camshaft Right Cyl Bank

PART NO.: 5135278 (72582)
5135277 (72582)

DATE: 18 Apr 83 BY: John Kirkland FROM: SDSRR-QA

REF: DMWR 9-2815-205

APPENDIX: B

REF	CHARACTERISTIC	DEFECT	METHOD OF INSPECTION	INSPECTION REQUISITE	MEASUREMENT INFORMATION: COMPLEXITY/ SKILL LEVEL (1-5)/(1-3)	ERROR PROBABILITY (# Out of Tol./ # Checked)	TESTS PERFORMED	PERFORMANCE TIME (For Test Group)	GROUPS PER SET-UP	FABRICATION CRITICALITY (1-3)	PERFORMANCE CRITICALITY (1-3)
A	Diameter	Major	Dial Bore Gage	1.1865 1.1875	4/2	0/25	1	5 min (2.5)	6.25	3	3
B	Surface Condition(Thrust surface)	Major	Visual	No surface scoring	3/2	0/25	1	2 min	6.25	2	3
C	Gear Teeth Condition	Major	Visual	No damaged or worn teeth, minor surface pitting or scoring is allowed.	3/2	0/25	1	2 min	6.25	2	3

Lot Sampling - 1 month period.

ITEM INFORMATION
INSPECTION VOLUME (# Items/ Time)
125/month
FABRICATION CRITICALITY (Rejects/ Time)
0/month
PERFORMANCE CRITICALITY (Rejects/ Time)
1/month
SET-UP TIME (Ref/Time)
A/2.5 min B,C/none

OK

IMPLEMENTATION PRIORITIZATION DATA

Contract No. DAAE07-83-C-R014

ITEM: Washer, Thrust: Camshaft End Bearing

PART NO.: 5121077(72582)

DATE: 18 Apr 83 BY: John Kirkland FROM: SDSRR-QA

REF: DMWR 9-2815-205

APPENDIX: B

REF	CHARACTERISTIC	DEFECT	METHOD OF INSPECTION	INSPECTION REQUISITE		MEASUREMENT INFORMATION: COMPLEXITY/ SKILL LEVEL (1-5)/(1-3)	ERROR PROBABILITY (# Out of Tol./ # Checked)	TESTS PERFORMED	PERFORMANCE TIME (For Test Group)	GROUPS PER SET-UP	FABRICATION CRITICALITY (1-3)	PERFORMANCE CRITICALITY (1-3)
A	Thickness	Major	Micrometer	0.2100	0.2080	3/2	0/44	1	2.5 min	11	3	3
B	Surface Condition	Minor	Visual	No surface scratches		1/2	0/44	1	2 min	11	2	3

Lot Sampling - 1 month period.

ITEM INFORMATION	
INSPECTION VOLUME (# Items/ Time)	220/month
FABRICATION CRITICALITY (Rejects/ Time)	0/month
PERFORMANCE CRITICALITY (Rejects/ Time)	0/month
SET-UP TIME (Ref/Time)	A,B/none

IMPLEMENTATION PRIORITIZATION DATA

Contract No. DAAE07-83-C-R014

ITEM: Follower Assembly: CAM

PART NO.: 5106642(72582)

DATE: 18 Apr 83 BY: John Kirkland FROM: SDSRR-QA

REF: DMWR 9-2815-205

APPENDIX: B

REF	CHARACTERISTIC	DEFECT	METHOD OF INSPECTION	INSPECTION REQUISITE		MEASUREMENT INFORMATION: COMPLEXITY/ SKILL LEVEL (1-5)/(1-3)	ERROR PROBABILITY (# Out of Tol./ # Checked)	TESTS PERFORMED	PERFORMANCE TIME (For Test Group)	GROUPS PER SET-UP	FABRICATION CRITICALITY (1-3)	PERFORMANCE CRITICALITY (1-3)
A	Diameter	Major	Micrometer	1.0610	1.0600	4/2	1/396	1	5 min	99	2	3
B	Diameter	Major	Micrometer	0.9070	0.9020	4/2	0/396	1	5 min	99	2	3
C	Diametric Clearance (Pin to roller bushing)	Major	Feeler Gage	0.0013	0.0021	2/2	0/396	1	2 min	99	2	3
D	Side Clearance (roller to follower)	Major	Feeler Gage	0.0110	0.0230	3/2	5/396	1	2 min	99	1	3
E	Surface Condition	Major	Visual	No surface scratches or scoring		2/2	0/792	2	2 min	99	2	3

Lot Sampling - 1 month period.

ITEM INFORMATION
INSPECTION VOLUME (# Items/ Time)
1980/month
FABRICATION CRITICALITY (Rejects/ Time)
1/month
PERFORMANCE CRITICALITY (Rejects/ Time)
0/month
SET-UP TIME (Ref/Time)
A-E/none

IMPLEMENTATION PRIORITIZATION DATA

Contract No. DAAE07-83-C-R014

ITEM: Exhaust Valve, W/Lock Valves

PART NO.: 5197176(72582)

DATE: 18 Apr 83 BY: John Kirkland FROM: SDSRR-QA

REF: DMWR 9-2815-205

APPENDIX: B

CHARACTERISTIC	DEFECT	METHOD OF INSPECTION	INSPECTION REQUISITE		MEASUREMENT INFORMATION: COMPLEXITY/ SKILL LEVEL (1-5)/(1-3)	ERROR PROBABILITY (# Out of Tol./ # Checked)	TESTS PERFORMED	PERFORMANCE TIME (For Test Group)	GROUPS PER SET-UP	FABRICATION CRITICALITY (1-3)	PERFORMANCE CRITICALITY (1-3)
Diameter	Major	Micrometer	0.2488	0.2480	4/3	2/528	1	5 min	132	2	3
Valve Stem Surface Condition	Major	Visual	No surface scratches or scuff marks		2/3	0/528	1	2 min	132	2	3
Surface Condition	Major	Visual	No Cracks		2/3	0/528	1	2 min	132	2	3
Thickness	Major	Scale		1/32 Min	4/3	0/528	1	5 min (2.5)	132	2	3
Valve Condition *	Major	Visual	Valve head to be square with stem and without warpage		4/3	3/528	1	2 min	132	2	3

Lot Sampling - 1 month period.

ITEM INFORMATION	
INSPECTION VOLUME (# Items/ Time)	2640/month
FABRICATION CRITICALITY (Rejects/ Time)	0/month
PERFORMANCE CRITICALITY (Rejects/ Time)	4/month
SET-UP TIME (Ref/Time)	A,B,C,E/none D/2.5 min.

IMPLEMENTATION PRIORITIZATION DATA

ITEM: Guide, Engine Cylinder Head Poppet Valve: Exhaust

PART NO.: 5131961(72582)

DATE: 18 Apr 83 BY: John Kirkland FROM: SDSRR-QA

REF: DMWR 9-2815-204

APPENDIX: B

REF	CHARACTERISTIC	DEFECT	METHOD OF INSPECTION	INSPECTION REQUISITE		MEASUREMENT INFORMATION: COMPLEXITY/ SKILL LEVEL (1-5)/(1-3)	ERROR PROBABILITY (# Out of Tol./ # Checked)	TESTS PERFORMED	PERFORMANCE TIME (For Test Group)	GROUPS PER SET-UP	FABRICATION CRITICALITY (1-3)	PERFORMANCE CRITICALITY (1-3)
A	Diameter	Major	Dial Bore Gage	0.2505	0.2515	4/3	2/528	1	5 min (2.5)	132	2	3
B	Surface Condition	Major	Visual	No surface scoring		2/3	0/528	1	2 min	132	1	3

Lot Sampling - 1 month period.

ITEM INFORMATION
INSPECTION VOLUME (# Items/ Time)
2640/month
FABRICATION CRITICALITY (Rejects/ Time)
0/month
PERFORMANCE CRITICALITY (Rejects/ Time)
0/month
SET-UP TIME (Ref/Time)
A/2.5 min B/none

IMPLEMENTATION PRIORITIZATION DATA

Contract No. DAAE07-83-C-R014

-ssy: Left Exhaust Valve Rocker
-ssy: Right Exhaust Valve Rocker

PART NO.: 5135267(72582)
5135268(72582)

-pr 83 BY: John Kirkland FROM: SDSRR-QA

REF: DMWR 9-2815-205

APPENDIX: B

CHARACTERISTIC	DEFECT	METHOD OF INSPECTION	INSPECTION REQUISITE	MEASUREMENT INFORMATION: COMPLEXITY/ SKILL LEVEL (1-5)/(1-3)	ERROR PROBABILITY (# Out of Tol./ # Checked)	TESTS PERFORMED	PERFORMANCE TIME (For Test Group)	GROUPS PER SET-UP	FABRICATION CRITICALITY (1-3)	PERFORMANCE CRITICALITY (1-3)
-meter	Major	Dial Bore Gage	0.8753 0.8763	4/2	0/264	1	5 min (2.5)	66	2	3
let Surface Condition	Major	Visual	No galling or excessive wear	2/2	0/264	1	2 min	66	2	3
- Surface Condition	Minor	Visual	No damage, excessive wear, gouges, or other defects that may affect function	2/2	0/264	1	2 min	66	1	3

Lot Sampling - 1 month period.

ITEM INFORMATION
INSPECTION VOLUME (# Items/ Time)
1320/month
FABRICATION CRITICALITY (Rejects/ Time)
0/month
PERFORMANCE CRITICALITY (Rejects/ Time)
0/month
SET-UP TIME (Ref/Time)
A/2.5 min B,C/none

14

ITEM: Shaft Assembly: Exhaust Valve Rocker Arm

PART NO.: 5116072 (72582)

DATE: 18 Apr 83 BY: John Kirkland FROM: SDSRR-QA

REF: DMWR 9-2815-205

APPENDIX: B

REF	CHARACTERISTIC	DEFECT	METHOD OF INSPECTION	INSPECTION REQUISITE		MEASUREMENT INFORMATION: COMPLEXITY/ SKILL LEVEL (1-5)/(1-3)	ERROR PROBABILITY (# Out of Tol./ # Checked)	TESTS PERFORMED	PERFORMANCE TIME (For Test Group)	GROUPS PER SET-UP	FABRICATION CRITICALITY (1-3)	PERFORMANCE CRITICALITY (1-3)
A	Diameter	Major	Micrometer	0.8740	0.8735	3/2	0/132	1	5 min	33	2	3
B	Surface Condition	Minor	Visual	No damage, excessive wear, gouges, or other defects that may affect function		1/2	0/132		2 min	33	1	3

Lot Sampling - 1 month period.

ITEM INFORMATION
INSPECTION VOLUME (# Items/ Time)
660/month
FABRICATION CRITICALITY (Rejects/ Time)
0/month
PERFORMANCE CRITICALITY (Rejects/ Time)
0/month
SET-UP TIME (Ref/Time)
A,B/none

ITEM: Arm Assembly: Fuel Injector Rocker

PART NO.: 5179954 (72582)

DATE: 18 Apr 83 BY: John Kirkland FROM: SDSRR-QA

REF: DMWR 9-2815-205

APPENDIX: B

REF	CHARACTERISTIC	DEFECT	METHOD OF INSPECTION	INSPECTION REQUISITE		MEASUREMENT INFORMATION: COMPLEXITY/ SKILL LEVEL (1-5)/(1-3)	ERROR PROBABILITY (# Out of Tol./ # Checked)	TESTS PERFORMED	PERFORMANCE TIME (For Test Group)	GROUPS PER SET-UP	FABRICATION CRITICALITY (1-3)	PERFORMANCE CRITICALITY (1-3)
A	Diameter (bushing)	Major	Dial Bore Gage	0.8750	0.8760	3/2	0/132	1	5 min (2.5)	33	2	3
B	Pallet Surface Condition	Major	Visual	No galling or excessive wear		2/2	0/132	1	2 min	33	2	3
C	Bushing Bore Surface Condition	Minor	Visual	No damage, excessive wear, gouges, or other defects that may affect function		2/2	0/132	1	2 min	33	2	3

Lot Sampling - 1 month period.

ITEM INFORMATION
INSPECTION VOLUME (# Items/ Time)
660/month
FABRICATION CRITICALITY (Rejects/ Time)
0/month
PERFORMANCE CRITICALITY (Rejects/ Time)
1/month
SET-UP TIME (Ref/Time)
A/2.5 min. B,C/none

IMPLEMENTATION PRIORITIZATION DATA

ITEM: Gear Assembly: Engine Fuel Pump Drive

PART NO.: 5125768 (72582)

DATE: 18 Apr 83 BY: John Kirkland FROM: SDSRR-QA

REF: DMWR 9-2815-205

APPENDIX: B

REF	CHARACTERISTIC	DEFECT	METHOD OF INSPECTION	INSPECTION REQUISITE	MEASUREMENT INFORMATION: COMPLEXITY/ SKILL LEVEL (1-5)/(1-3)	ERROR PROBABILITY (# Out of Tol./ # Checked)	TESTS PERFORMED	PERFORMANCE TIME (For Test Group)	GROUPS PER SET-UP	FABRICATION CRITICALITY (1-3)	PERFORMANCE CRITICALITY (1-3)
A	Diameter (Bushing)	Major	Dial Bore Gage	1.122 1.123	3/2	0/21.6	1	5 min	5.4	2	3
B	Surface Condition (thrust surface-both sides)	Major		No surface scoring	2/2	0/21.6	2	2 min	5.4	2	3
C	Gear Teeth Condition		Visual	No damaged or worn teeth, no surface pitting, or scoring	2/2	0/21.6	1	2 min	5.4	2	3

ITEM INFORMATION
INSPECTION VOLUME (# Items/ Time)
108/month
FABRICATION CRITICALITY (Rejects/ Time)
0/month
PERFORMANCE CRITICALITY (Rejects/ Time)
0/month
SET-UP TIME (Ref/Time)
A/2.5 min B,C/none

IMPLEMENTATION PRIORITIZATION DATA

Hub, Fuel Pump

ITEM: Hub: Engine Fuel Pump Drive

PART NO.: 5125774 (72582)

DATE: 18 Apr 83 BY: John Kirkland FROM: SDSRR-QA

REF: DMWR 9-2815-205

APPENDIX: B

REF	CHARACTERISTIC	DEFECT	METHOD OF INSPECTION	INSPECTION REQUISITE		MEASUREMENT INFORMATION: COMPLEXITY/ SKILL LEVEL (1-5)/(1-3)	ERROR PROBABILITY (# Out of Tol./ # Checked)	TESTS PERFORMED	PERFORMANCE TIME (For Test Group)	GROUPS PER SET-UP	FABRICATION CRITICALITY (1-3)	PERFORMANCE CRITICALITY (1-3)
A	Diameter	Major	Micrometer	1.1200	1.1205	3/2	0/21.6	1	5 min	5.4	2	3
B	Surface Condition	Major	Visual	No surface scoring		2/2	0/21.6	1	2.5 min.	5.4	1	3

Lot Sampling - 1 month period.

ITEM INFORMATION
INSPECTION VOLUME (# Items/ Time)
108/month
FABRICATION CRITICALITY (Rejects/ Time)
0/month
PERFORMANCE CRITICALITY (Rejects/ Time)
0/month
SET-UP TIME (Ref/Time)
A,B/none

ITEM: Washer, Thrust

PART NO.: 5125771 (72582)

DATE: 18 Apr 83 BY: John Kirkland FROM: SDSRR-QA

REF: DMWR 9-2815-205

APPENDIX: B

REF	CHARACTERISTIC	DEFECT	METHOD OF INSPECTION	INSPECTION REQUISITE	MEASUREMENT INFORMATION: COMPLEXITY/ SKILL LEVEL (1-5)/(1-3)	ERROR PROBABILITY (# Out of Tol./ # Checked)	TESTS PERFORMED	PERFORMANCE TIME (For Test Group)	GROUPS PER SET-UP	FABRICATION CRITICALITY (1-3)	PERFORMANCE CRITICALITY (1-3)
A	Thickness	Major	Micrometer	0.156 min	3/2	0/21.6	1	5 min	5.4	2	3
B	Surface Condition (both sides)	Major	Visual	No surface scoring	1/2	0/21.6	2	5 min	5.4	1	2

Lot Sampling - 1 month period.

ITEM INFORMATION
INSPECTION VOLUME (# Items/ Time)
108/month
FABRICATION CRITICALITY (Rejects/ Time)
0/month
PERFORMANCE CRITICALITY (Rejects/ Time)
0/month
SET-UP TIME (Ref/Time)
A,B/none

IMPLEMENTATION PRIORITIZATION DATA

Contract No. DAAE07-83-C-R014

ITEM: Housing: Starter Drive

PART NO.: 1945508 (16764)

DATE: 18 Apr 83 BY: John Kirkland FROM: SDSRR-QA

REF: DMWR 9-2815-205

APPENDIX: B

REF	CHARACTERISTIC	DEFECT	METHOD OF INSPECTION	INSPECTION REQUISITE		MEASUREMENT INFORMATION: COMPLEXITY/ SKILL LEVEL (1-5)/(1-3)	ERROR PROBABILITY (# Out of Tol./ # Checked)	TESTS PERFORMED	PERFORMANCE TIME (For Test Group)	GROUPS PER SET-UP	FABRICATION CRITICALITY (1-3)	PERFORMANCE CRITICALITY (1-3)
A	Diameter	Major	Dial Bore Gage	0.7490	0.7500	2/2	0/20	1	2.5 min	5	3	3
						Lot Sampling - 1 month period.						

ITEM INFORMATION
INSPECTION VOLUME (# Items/ Time)
100/month
FABRICATION CRITICALITY (Rejects/ Time)
0/month
PERFORMANCE CRITICALITY (Rejects/ Time)
0/month
SET-UP TIME (Ref/Time)
A/2.5 min

IMPLEMENTATION PRIORITIZATION DATA

Contract No. DAAE07-83-C-R014

ITEM: Bushi... leeve: Starter Drive Housing — PART NO.: 1945509 (16764)

DATE: 18 ... 33 — BY: John Kirkland — FROM: SDSRR-QA — REF: DMWR 9-2815-205

APPENDIX: B

REF	CHARACTERISTIC	DEFECT	METHOD OF INSPECTION	INSPECTION REQUISITE		COMPLEXITY/ SKILL LEVEL (1-5)/(1-3)	ERROR PROBABILITY (# Out of Tol./ # Checked)	TESTS PERFORMED	PERFORMANCE TIME (For Test Group)	GROUPS PER SET-UP	FABRICATION CRITICALITY (1-3)	PERFORMANCE CRITICALITY (1-3)
	...er	Major	Dial Bore Gage	0.6240	0.6260	3/2	0/20	1	5 min	6	3	3
A	Dia... ...r	Major	Micrometer	0.7570	0.7550	2/2	0/20	1	2.5 min	6	3	3
B	Dia... Condition	Major	Visual	No score marks, scratches or nicks.		1/2	0/20	1	2 min	6	2	3
C	Su...											

Lot Sampling - 1 month period.

ITEM INFORMATION
INSPECTION VOLUME (# Items/ Time)
100/month
FABRICATION CRITICALITY (Rejects/ Time)
0/month
PERFORMANCE CRITICALITY (Rejects/ Time)
0/month
SET-UP TIME (Ref/Time)
A/2.5 min. B,C/None

IMPLEMENTATION PRIORITIZATION DATA

ITEM: Frame Assembly: Commutator End

PART NO.: 1948518 (16764)

DATE: 18 Apr 83 BY: John Kirkland FROM: SDSRR-QA

REF: DMWR 9-2815 205

APPENDIX: B

REF	CHARACTERISTIC	DEFECT	METHOD OF INSPECTION	INSPECTION REQUISITE	MEASUREMENT INFORMATION: COMPLEXITY/ SKILL LEVEL (1-5)/(1-3)	ERROR PROBABILITY (# Out of Tol./ # Checked)	TESTS PERFORMED	PERFORMANCE TIME (For Test Group)	GROUPS PER SET-UP	FABRICATION CRITICALITY (1-3)	PERFORMANCE CRITICALITY (1-3)
A	Inside Diameter (Bearing)	Major	Dial Bore Gage	0.5625 0.5635	3/2	0/20	1	5 min	5	2	3
B	Surface Condition(Bearing)	Minor	Visual	No nicks, score marks or scratches	1/2	0/20	1	2 min	5	2	3
C	Surface Condition(Machined surfaces)	Minor	Visual	No scratches, burs, or nicks	1/2	0.20	1	2 min	5	2	3

Lot Sampling - 1 month period.

ITEM INFORMATION
INSPECTION VOLUME (# Items/ Time)
100/month
FABRICATION CRITICALITY (Rejects/ Time)
0/month
PERFORMANCE CRITICALITY (Rejects/ Time)
0/month
SET-UP TIME (Ref/Time)
A/2.5 min. B,C/none

IMPLEMENTATION PRIORITIZATION DATA

ITEM: Armature: Starter

PART NO.: 1945500 (16/64)

DATE: 18 Apr 83 BY: John Kirkland FROM: SDSRR-QA

REF: DMWR 9-2815 205

APPENDIX: B

REF	CHARACTERISTIC	DEFECT	METHOD OF INSPECTION	INSPECTION REQUISITE		MEASUREMENT INFORMATION: COMPLEXITY/ SKILL LEVEL (1-5)/(1-3)	ERROR PROBABILITY (# Out of Tol./ # Checked)	TESTS PERFORMED	PERFORMANCE TIME (For Test Group)	GROUPS PER SET-UP	FABRICATION CRITICALITY (1-3)	PERFORMANCE CRITICALITY (1-3)
A	Diameter	Major	Micrometer	0.5610	0.5590	3/2	0/36	1	2.5 min	9	3	3
B	Diameter	Major	Micrometer	0.8240	0.8225	3/2	0/36	1	2.5 min	9	2	2
C	Diameter	Major	Micrometer	0.6230	0.6170	3/2	0/36	1	2.5 min	9	3	3
D	Diameter	Major	Micrometer	..	2.1930Min	3/2	0/36	1	2.5 min	9	2	2
E	Depth of Mica Below Surface of commutator	Major	Depth Gage	0.025	0.032	3/2	0/36	1	5 min	9	2	2
F	Runout of Diameter D to Diameters A and C	Major	Dial Indicator, V-Blocks and surface plate		0.0020TIR	4/2	0/36	1	6.5 min	9	2	3
G	Spline Teeth Condition	Major	Visual	No damaged or excessively worn teeth		2/2	0/36	1	2 min	9	3	3
H	Surface Condition of Commutator	Major	Visual	Surface must not be pitted, scored, burned or coated with hard carbon or oil		2/2	1/36	1	2 min	9	2	3
I	Shorts and grounds	Major	Test as specified in TM 9-2815-205-34	No shorts or grounds permitted		4/2	1/36	1	5 min	9	3	3

Lot Sampling - 1 month period.

ITEM INFORMATION
INSPECTION VOLUME (# Items/ Time)
180/month
FABRICATION CRITICALITY (Rejects/ Time)
2/month
PERFORMANCE CRITICALITY (Rejects/ Time)
0/month
SET-UP TIME (Ref/Time)
A,B,C,D,G,H/ none E/2.5 min F/5 min. I/5 min.

IMPLEMENTATION PRIORITIZATION DATA

Contract No. DAAE07-83-C-R014

ITEM: Washer, Flat: Starter Armature

PART NO.: 1914842 (16764)

DATE: 18 Apr 83 BY: John Kirkland FROM: SDSRR-QA

REF: DMWR 9-2815-205

APPENDIX: B

REF	CHARACTERISTIC	DEFECT	METHOD OF INSPECTION	INSPECTION REQUISITE		MEASUREMENT INFORMATION: COMPLEXITY/ SKILL LEVEL (1-5)/(1-3)	ERROR PROBABILITY (# Out of Tol./ # Checked)	TESTS PERFORMED	PERFORMANCE TIME (For Test Group)	GROUPS PER SET-UP	FABRICATION CRITICALITY (1-3)	PERFORMANCE CRITICALITY (1-3)
A	Thickness	Major	Micrometer	0.0670	0.0570	3/2	0/20	1	2.5 min	5	2	3
B	Surface Condition (both sides)	Minor	Visual	No deformation permitted		1/2	0/20	1	2 min	5	1	2

Lot Sampling - 1 month period.

ITEM INFORMATION
INSPECTION VOLUME (# Items/ Time)
100/month
FABRICATION CRITICALITY (Rejects/ Time)
0/month
PERFORMANCE CRITICALITY (Rejects/ Time)
0/month
SET-UP TIME (Ref/Time)
A,B/none

IMPLEMENTATION PRIORITIZATION DATA

ITEM: Drive, Engine, Electrical: Starter Pinion

PART NO.: 800069 (16764)

DATE: 18 Apr 83 BY: John Kirkland FROM: SDSRR-QA

REF: DMWR 9-2815-205

APPENDIX: B

REF	CHARACTERISTIC	DEFECT	METHOD OF INSPECTION	INSPECTION REQUISITE	MEASUREMENT INFORMATION: COMPLEXITY/ SKILL LEVEL (1-5)/(1-3)	ERROR PROBABILITY (# Out of Tol./ # Checked)	TESTS PERFORMED	PERFORMANCE TIME (For Test Group)	GROUPS PER SET-UP	FABRICATION CRITICALITY (1-3)	PERFORMANCE CRITICALITY (1-3)
A	Diameter (bearing)	Major	Dial Bore Gage	0.6245 0.6250	3/2	0/20	1	2.5 min	6	2	3
B	Condition of splines and gear teeth	Major	Visual	Minor nicks or burs no badly worn teeth	2/2	0/20	1	2 min	6	2	3
C	Surface Condition (bearing ID)	Major	Visual	Minor rough spots score marks or scratches	1/2	0/20	1	2 min	6	2	3

Lot Sampling - 1 month period.

ITEM INFORMATION
INSPECTION VOLUME (# Items/ Time)
100 month
FABRICATION CRITICALITY (Rejects/ Time)
0/month
PERFORMANCE CRITICALITY (Rejects/ Time)
0/month
SET-UP TIME (Ref/Time)
A/2.5 min B,C/none

ITEM: Washer: Starter Pinion Drive

PART NO.: 1911644 (16764)

DATE: 18 Apr 83 BY: John Kirkland FROM: SDSRR-QA

REF: DMWR 9-2815-205

APPENDIX: B

REF	CHARACTERISTIC	DEFECT	METHOD OF INSPECTION	INSPECTION REQUISITE		MEASUREMENT INFORMATION: COMPLEXITY/ SKILL LEVEL (1-5)/(1-3)	ERROR PROBABILITY (# Out of Tol./ # Checked)	TESTS PERFORMED	PERFORMANCE TIME (For Test Group)	GROUPS PER SET-UP	FABRICATION CRITICALITY (1-3)	PERFORMANCE CRITICALITY (1-3)
A	Thickness	Major	Micrometer	0.1960	0.1800	3/2	0/24	1	2.5 min	7	2	3
B	Surface Condition (both sides)	Minor	Visual	No deformation permitted		1/2	0/24	2	2 min	7	1	2

Lot Sampling - 1 month period.

ITEM INFORMATION
INSPECTION VOLUME (# Items/ Time)
120/month
FABRICATION CRITICALITY (Rejects/ Time)
0/month
PERFORMANCE CRITICALITY (Rejects/ Time)
0/month
SET-UP TIME (Ref/Time)
A,B/none

IMPLEMENTATION PRIORITIZATION DATA

Contract No. DAAE07-83-C-R014

ITEM: Lever Assembly: Starter Pinion Drive

PART NO.: 1945484 (16764)

DATE: 18 Apr 83 BY: John Kirkland FROM: SDSRR-QA

REF: DMWR 9-2815-205

APPENDIX: B

REF	CHARACTERISTIC	DEFECT	METHOD OF INSPECTION	INSPECTION REQUISITE		MEASUREMENT INFORMATION: COMPLEXITY/ SKILL LEVEL (1-5)/(1-3)	ERROR PROBABILITY (# Out of Tol./ # Checked)	TESTS PERFORMED	PERFORMANCE TIME (For Test Group)	GROUPS PER SET-UP	FABRICATION CRITICALITY (1-3)	PERFORMANCE CRITICALITY (1-3)
A	Diameter	Major	Go Plug Gage No-go Plug Gage	0.5100	0.5120	3/2	0/20	1	2.5 min	6	1	3
B	Surface Condition(both sides)	Minor	Visual	Minor rough spots scratches or nicks		1/2	0/20	1	2 min	6	1	2
C	Lever Condition	Minor	Visual	No distortion permitted		1/2	0/20	1	2 min	6	1	2

Lot Sampling - 1 month period.

ITEM INFORMATION
INSPECTION VOLUME (# Items/ Time)
100/month
FABRICATION CRITICALITY (Rejects/ Time)
0/month
PERFORMANCE CRITICALITY (Rejects/ Time)
0/month
SET-UP TIME (Ref/Time)
A,B,C/none

ITEM: Shaft: Shift Lever

PART NO.: 1948529 (16764)

DATE: 18 Apr 83 BY: John Kirkland FROM: SDSRR-QA

REF: DMWR 9-2815-205

APPENDIX: B

REF	CHARACTERISTIC	DEFECT	METHOD OF INSPECTION	INSPECTION REQUISITE	MEASUREMENT INFORMATION: COMPLEXITY/ SKILL LEVEL (1-5)/(1-3)	ERROR PROBABILITY (# Out of Tol./ # Checked)	TESTS PERFORMED	PERFORMANCE TIME (For Test Group)	GROUPS PER SET-UP	FABRICATION CRITICALITY (1-3)	PERFORMANCE CRITICALITY (1-3)
A	Diameter	Major	Micrometer	0.5000 0.4980	3/2	0/20	1	2.5 min	5.6	2	3
B	Surface Condition	Minor	Visual	No rough spots, scratches, or nicks	1/2	0/20	1	2 min	5.6	1	2

Lot Sampling - 1 month period.

ITEM INFORMATION
INSPECTION VOLUME (# Items/ Time)
100/month
FABRICATION CRITICALITY (Rejects/ Time)
0/month
PERFORMANCE CRITICALITY (Rejects/ Time)
0/month
SET-UP TIME (Ref/Time)
A,B/none

IMPLEMENTATION PRIORITIZATION DATA

Contract No. DAAE07-83-C-R014

ITEM: Bushing, Bearing: Starter Shift Lever Housing

PART NO.: 7748634 (19207)

DATE: 18 Apr 83 BY: John Kirkland FROM: SDSRR-QA

REF: DMWR 9-2815-205

APPENDIX: B

REF	CHARACTERISTIC	DEFECT	METHOD OF INSPECTION	INSPECTION REQUISITE		MEASUREMENT INFORMATION: COMPLEXITY/ SKILL LEVEL (1-5)/(1-3)	ERROR PROBABILITY (# Out of Tol./ # Checked)	TESTS PERFORMED	PERFORMANCE TIME (For Test Group)	GROUPS PER SET-UP	FABRICATION CRITICALITY (1-3)	PERFORMANCE CRITICALITY (1-3)
A	Diameter	Major	Dial Bore Gage	0.8335	0.8355	3/2	0/20	1	2.5 min	5	2	3
B	Diameter	Major	Micrometer	0.9650	0.9630	3/2	0/20	1	2.5 min	5	2	3
C	Surface Condition	Minor	Visual	Minor scratches, score marks, or nicks		1/2	0/20	1	2 min	5	1	2

Lot Sampling - 1 month period.

ITEM INFORMATION
INSPECTION VOLUME (# Items/ Time)
100/month
FABRICATION CRITICALITY (Rejects/ Time)
0/month
PERFORMANCE CRITICALITY (Rejects/ Time)
0/month
SET-UP TIME (Ref/Time)
A/2.5 min. B,C/none

IMPLEMENTATION PRIORITIZATION DATA

ITEM: Support, Blower Drive Gear Hub

PART NO.: 5129168 (72582)

DATE: 18 Apr 83 BY: John Kirkland FROM: SDSRR-QA

REF: DMWR 9-2815-205

APPENDIX: B

REF	CHARACTERISTIC	DEFECT	METHOD OF INSPECTION	INSPECTION REQUISITE		MEASUREMENT INFORMATION: COMPLEXITY/ SKILL LEVEL (1-5)/(1-3)	ERROR PROBABILITY (# Out of Tol./ # Checked)	TESTS PERFORMED	PERFORMANCE TIME (For Test Group)	GROUPS PER SET-UP	FABRICATION CRITICALITY (1-3)	PERFORMANCE CRITICALITY (1-3)
A,B	Surface Condition of bores and thrust faces	Minor	Visual	No scoring		2/2	0/23.6	1	2 min	5.9	1	3
B	Diameter	Major	Dial Bore Gage	1.4050	1.4060	3/3	1/23.6	1	5 min	5.9	2	3

Lot Sampling - 1 month period.

ITEM INFORMATION
INSPECTION VOLUME (# Items/ Time)
118/month
FABRICATION CRITICALITY (Rejects/ Time)
0/month
PERFORMANCE CRITICALITY (Rejects/ Time)
1/month
SET-UP TIME (Ref/Time)
A/none B/2.5 min

ITEM: Hub: Blower Drive Gear

PART NO.: 5116418 (72582)

DATE: 18 Apr 83 BY: John Kirkland FROM: SDSRR-QA

REF: DMWR 9-2815-205

APPENDIX: B

REF	CHARACTERISTIC	DEFECT	METHOD OF INSPECTION	INSPECTION REQUISITE	MEASUREMENT INFORMATION: COMPLEXITY/ SKILL LEVEL (1-5)/(1-3)	ERROR PROBABILITY (# Out of Tol./ # Checked)	TESTS PERFORMED	PERFORMANCE TIME (For Test Group)	GROUPS PER SET-UP	FABRICATION CRITICALITY (1-3)	PERFORMANCE CRITICALITY (1-3)
A	Diameter	Major	Micrometer	1.4010 1.4015	2/3	0/23.6	1	2.5 min	6	1	3
B	Surface Condition	Major	Visual	No pitted, scratched or scored surface	1/3	0/23.6	1	2 min	6	1	3
C	Condition of Serrations	Major	Visual	No damaged or badly worn teeth	1/3	0/23.6	1	2 min	6	1	3

Lot Sampling - 1 month period.

ITEM INFORMATION
INSPECTION VOLUME (# Items/ Time)
118/month
FABRICATION CRITICALITY (Rejects/ Time)
0/month
PERFORMANCE CRITICALITY (Rejects/ Time)
0/month
SET-UP TIME (Ref/Time)
A,B,C/none

ITEM: Washer, Thrust: Blower Drive Gear Hub

PART NO.: [illegible]

DATE: 18 Apr 83 BY: John Kirkland FROM: SDSRR-QA

REF: DMWR 9-2815-205

APPENDIX: B

REF	CHARACTERISTIC	DEFECT	METHOD OF INSPECTION	INSPECTION REQUISITE		MEASUREMENT INFORMATION: COMPLEXITY/ SKILL LEVEL (1-5)/(1-3)	ERROR PROBABILITY (# Out of Tol./ # Checked)	TESTS PERFORMED	PERFORMANCE TIME (For test group)	GROUPS PER SET-UP	FABRICATION CRITICALITY (1-3)	PERFORMANCE CRITICALITY (1-3)
A	Thickness	Major	Micrometer	0.093	0.103	3/2	0/25	1	2.5 min	5.5	2	3
B	Surface Condition(both sides)	Minor	Visual	No scoring		1/2	0/25	1	2 min	5.5	1	3

Lot Sampling - 1 month period.

ITEM INFORMATION
INSPECTION VOLUME (# Items/ Time)
118/month
FABRICATION CRITICALITY (Rejects/ Time)
0/month
PERFORMANCE CRITICALITY (Rejects/ Time)
0/month
SET-UP TIME (Ref/Time)
A,B/none

IMPLEMENTATION PRIORITIZATION DATA

Contract No. DAAE07-83-C-R014

APPENDIX B

PRELIMINARY ELECTRONIC SENSOR SUBSYSTEM SPECIFICATION

1.0 Introduction

A. General Description

The sensing system described in this specification will be used as a part of an automatic gauging system to measure dimensions of interest on machined steel parts (i.e., engine block, pistons, etc.).

The types of measurements include inside diameter, outside diameter, depth of counterbores, and runout.

B. Quotation Requirements

1. Questions regarding this specification shall be directed to: GARD, INC., 7449 N. Natchez Ave., Niles, Illinois 60648, Attn: Michael Caines (312)647-9000.
2. Quotation shall be based upon this specification. The cost of each item shall be provided for future system acquisition analysis purposes.

1.1 General Requirements

A. The Seller shall furnish a new gauging device system consisting of:

1. 6 gauging sensors
2. 2 sensor rods
3. Two axis motorized movement
4. A motor control system
5. Electronic instrumentation (2 channel).

B. The work to be performed under terms of this specification shall include, but not be limited to, the following:

1. Provide, coordinate, and supervise the orderly shipment of the gauging system to GARD, INC.
2. Provide written instructions, at time of delivery, describing the proper calibration, use, and interfacing of the gauging system.

1.2 Performance Requirements

The Seller's gauging system shall be designed to, and shall comply with, the following requirements:

A. System Measurement Accuracy

The gauging system will be required to perform dimensional measurements of parts which are toleranced x.xxxx - x.xxxx, therefore the fourth decimal place shall be true and accurate.

B. System Stability

1. System warm-up time shall not exceed 10 minutes.
2. The system shall maintain the required accuracies over the period of a 8 hour shift without the need for manual re-calibration.
3. When necessary, system calibration shall not exceed 20 minutes with supplied equipment.
4. System settling time (i.e., time required to obtain an accurate measurement after mechanical movement of the probe rods) shall not exceed 1 second.

C. System Operating Environment

1. The system shall maintain the specified accuracies over an ambient temperature range of 50°F to 110°F, without recalibration.

2. The system shall be fully operational in a typical "shop" environment where dust and humidity changes can occur.

1.3 Specific Requirements

A. Sensors

There shall be a total of 6 sensors within the gauging system. The sensors shall be mounted three per sensor rod (see attached drawings A and B).

B. Sensor Operation

The sensors shall operate both independently and in pairs of two for a summed output. System accuracy shall be maintained for any mode of sensor operation (independent or summed).

C. Sensor Linear Operating Range

Each sensor shall provide a linear measurement range of at least 0.050 inches.

D. Sensor Rod Positioning Accuracy

There shall be two relative axes of sensor rod motion, defined as X and Y (see attached drawing C). The gauging system shall allow controlled incremental linear motion of 0.005" or less with a repeatability of 0.005" or less for both axes. Once the sensor rods are positioned, the system shall hold that position without movement.

E. Sensor Rod Positioning Range

The X axis shall provide a relative sensor rod positioning range of 0 to 10". The Y axis shall provide a relative sensor rod positioning range of 0 to 5".

F. Electronic Instrumentation

1. The electronic instrumentation required to produce the measurements of interest shall consist of a two channel instrument capable of producing dimensional data from two sensors independently and also a summed output.
2. The electronic instrumentation shall also include a means of selecting active pairs of sensors through the use of a switching arrangement.
3. The electronic instrumentation shall also present the measured dimensions via a visual digital readout device.

G. Interface Requirements

1. The motor control system shall interface with a Z80A-based STD bus computer system and be controlled by the same.
2. The measured dimension shall be presented in a digital format on the STD bus, at a resolution sufficient for required system accuracy.

H. Weight Limitation

The gauging mechanism (sensors, movements, motors) shall be less than or equal to 5 lbs. The remainder of the system shall be of a reasonable size and weight.

1.4 Documentation Requirements

The Seller shall provide the following documentation at time of delivery:

1. Mechanical drawings of the system
2. Electrical schematics
3. System parts list
4. A functional description of system operation and calibration
5. System and subsystem interface diagrams.

1.5 Acceptance Test

The acceptance test of the Seller's system will be performed at GARD and will consist of:

1. The gauging system will be used to measure I.D., O. D., and depth from standard calibration blocks and rings. The dimensional data produced by the system must agree exactly (to four decimal places) with the actual dimension of the reference standard.
2. The gauging system will be connected to a STD bus computer and the motor control function will be tested by verifying that .005" or smaller incremental motion is possible and that the motion is repeatable to the increment size. The STD bus computer will then read the digital output from the system and verify that the digital output corresponds to the actual dimensions being measured. The software will be written by GARD, however the algorithms and hardware addresses for the interfaces must be supplied.
3. System stability will be tested by setting up and calibrating the system with a reference standard and verifying that the dimension shown by the system does not change over an 8 hour period.

4. System stability will also be verified by placing the electronic instrumentation in an environmental chamber and repeating 1.5.3 at 50°F and 110°F.

1.6 Notice

This document is supplied to the Seller for quotation and estimation purposes and does not commit GARD, INC. to any expenses incurred by the Seller during preparation of a quotation, nor does it imply a commitment by GARD to purchase a system from the Seller until a formal Purchase Order is submitted by GARD, INC. to the Seller.

LTR	REVISION	DATE	APPR
A			

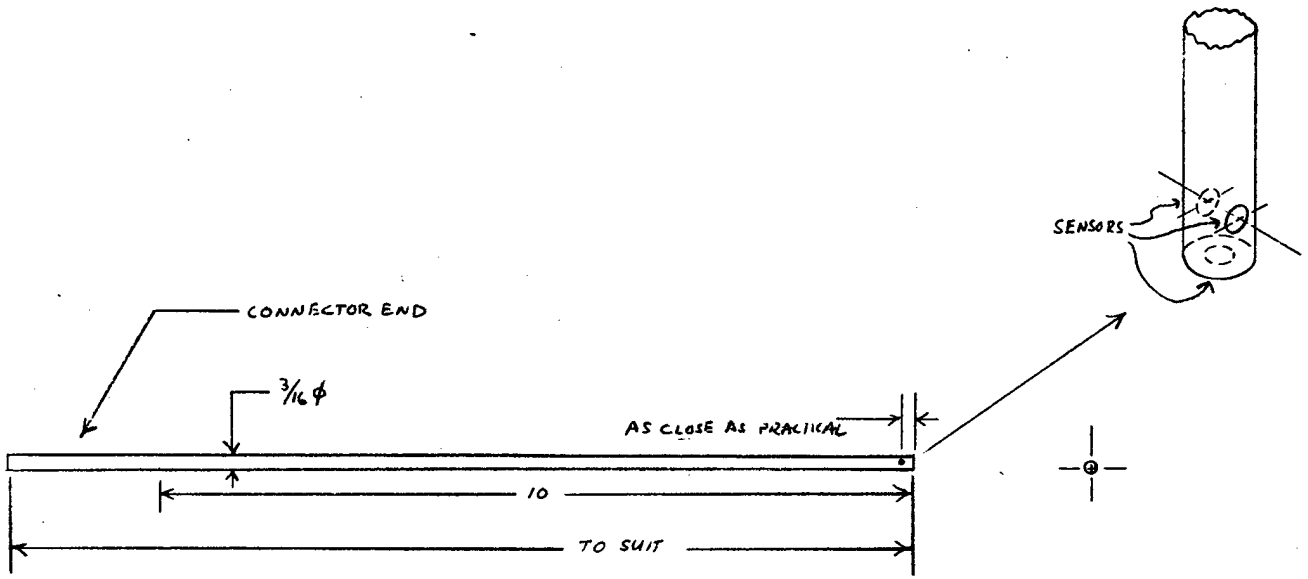

QTY REQ'D	DWG SIZE	DWG. OR PART NO.	TITLE OR DESCRIPTION	ITEM

		FINISH						
		TREATMENT						
		MATERIAL						
		YP		RA		DRAWN		
		TS		BH		CHECKED		
NEXT ASSEMBLY	NO. REQ'D	EL2		RH		APPROVED		

FRACTIONS ± 1/32
X.XX ± 0.015
X.XXX ± 0.005
ANGULAR ± 1/2°

GATX GARD, INC.
7449 NORTH NATCHEZ AVE. NILES, IL 60648

WT.
SCALE 1/2

A

PROBE SIZE

SHEET A

LTR	REVISION	DATE	APPR
A			

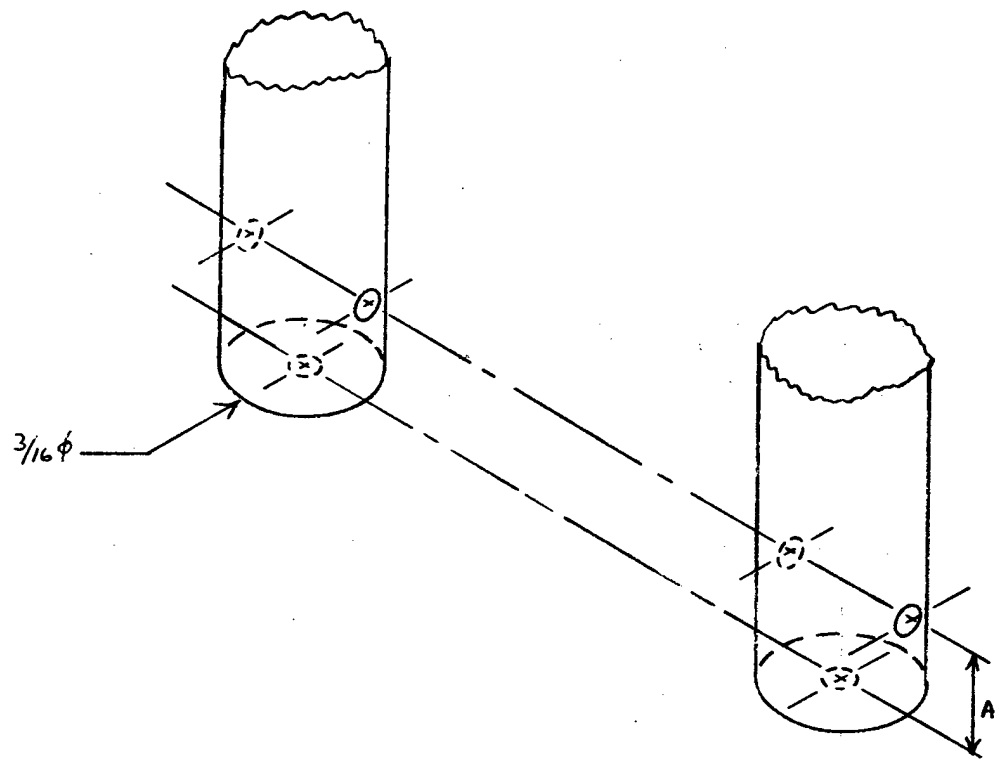

A: AS CLOSE TO BOTTOM OF ROD AS PRACTICAL

SENSORS TO REMAIN ON AXES SHOWN
ROTATION NOT ALLOWED

QTY REQ'D	DWG SIZE	DWG. OR PART NO.	TITLE OR DESCRIPTION	ITEM

		FINISH				FRACTIONS ± 1/32		
		TREATMENT				X.XX ± 0.015		
		MATERIAL				X.XXX ± 0.005		
						ANGULAR ± 1/2°		
		YP		RA		DRAWN		
		TS		BH		CHECKED		
NEXT ASSEMBLY	NO. REQ'D	EL2		RH		APPROVED		

GATX GARD, INC.
7449 NORTH NATCHEZ AVE. NILES, IL 60648

WT.	A	SENSOR ORIENTATION	SHEET
SCALE 4X			B

LTR	REVISION	DATE	APPR
A			

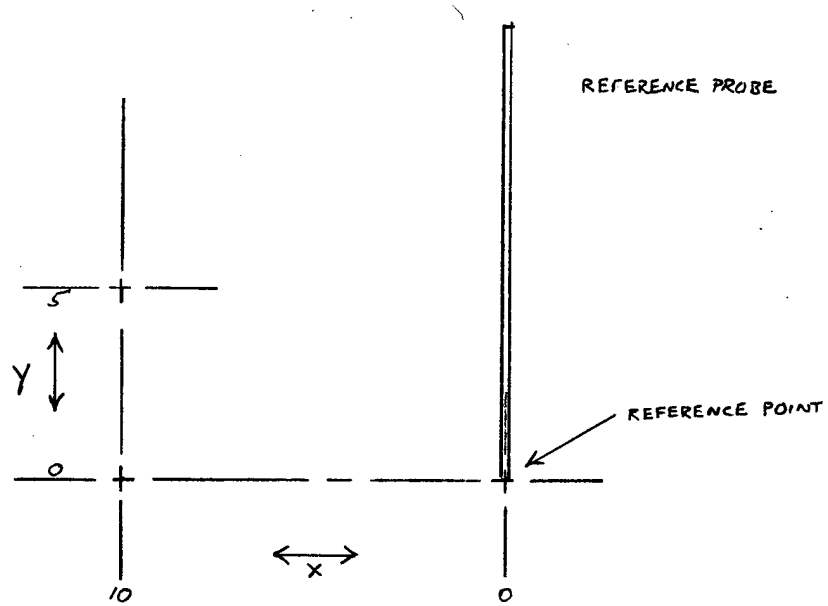

QTY REQ'D	DWG SIZE	DWG. OR PART NO.	TITLE OR DESCRIPTION	ITEM

		FINISH				FRACTIONS ± 1/32	GATX GARD, INC. 7449 NORTH NATCHEZ AVE. NILES, IL 60648	
		TREATMENT				X.XX ± 0.015		
		MATERIAL				X.XXX ± 0.005		
						ANGULAR ± 1/2°	REQUIRED MOTIONS	
		YP	RA	DRAWN				
		TS	BH	CHECKED			WT.	A	SHEET
NEXT ASSEMBLY	NO. REQ'D	EL2	RH	APPROVED			SCALE 1/4		C

DISTRIBUTION LIST

Commander
U. S. Army Tank-Automotive Command
Warren, Michigan 48090

Attn:	DRSTA-QAT	4
	DRSTA-TSL	14
	DRSTA-TSE	1

Commander
Defense Technical Information Center
Cameron Station
5010 Duke Street
Alexandria, Virginia 15